免费标准网(www.freebz.net) 标准最全面

Designation: D 3574 – 05

Standard Test Methods for Flexible Cellular Materials—Slab, Bonded, and Molded Urethane Foams[1]

This standard is issued under the fixed designation D 3574; the number immediately following the designation indicates the year of original adoption or, in the case of revision, the year of last revision. A number in parentheses indicates the year of last reapproval. A superscript epsilon (ϵ) indicates an editorial change since the last revision or reapproval.

This standard has been approved for use by agencies of the Department of Defense.

1. Scope*

1.1 These test methods apply to slab, bonded, and molded flexible cellular products known as urethane foams. Urethane foam may be generally defined as an expanded cellular product produced by the interaction of active hydrogen compounds, water, and isocyanates.

1.2 *This standard does not purport to address all of the safety concerns, if any, associated with its use. It is the responsibility of the user of this standard to establish appropriate safety and health practices and determine the applicability of regulatory limitations prior to use.*

1.3 The values stated in SI units are to be regarded as standard.

NOTE 1—There is no equivalent ISO standard, however certain test methods in this standard have similar or equivalent ISO standards and are listed in the scope of the individual test method sections.

2. Referenced Documents

2.1 *ASTM Standards:* [2]

D 412 Test Methods for Vulcanized Rubber and Thermoplastic Elastomers—Tension

D 624 Test Method for Tear Strength of Conventional Vulcanized Rubber and Thermoplastic Elastomers

D 726 Test Method for Resistance of Nonporous Paper to Passage of Air

D 737 Test Method for Air Permeability of Textile Fabrics

D 3675 Test Method for Surface Flammability of Flexible Cellular Materials Using a Radiant Heat Energy Source

E 162 Test Method for Surface Flammability of Materials Using a Radiant Heat Energy Source

E 662 Test Method for Specific Optical Density of Smoke Generated by Solid Materials

E 691 Practice for Conducting an Interlaboratory Study to Determine the Precision of a Test Method

3. Terminology

3.1 *Definitions of Terms Specific to This Standard:*

3.1.1 *bonded foam*—a product produced by the adhesion of small pieces of urethane foam to each other with a suitable bonding agent.

3.1.2 *core*—the internal portion of a molded part, free of skin.

3.1.3 *cored foam*—a flexible cellular material containing a multiplicity of holes (usually, but not necessarily, cylindrical in shape), molded or cut into the material in some pattern, normally perpendicular to the foam rise direction, and extending part or all the way through the piece

3.1.4 *convoluted foam*—a flexible cellular material specially cut into sheets with "egg carton"-like dimples. The dimple peaks and bases can have varied shapes and dimensions.

3.1.5 *flexible cellular product*—a cellular organic polymeric material that will not rupture when a specimen 200 by 25 by 25 mm is bent around a 25-mm diameter mandrel at a uniform rate of one lap in 5 s at a temperature between 18 and 29°C.

3.1.6 *molded foam*—a cellular product having the shape of the enclosed chamber in which it is produced by foaming.

3.1.7 *skin*—the smooth surface layer of a molded foam product, formed by contact with the mold or surfaces.

3.1.8 *slab*—a section of foam that is cut from the internal portion of a large bun.

3.1.9 *urethane foam*—a flexible cellular product produced by the interaction of active hydrogen compounds, water, and isocyanates.

3.1.10 *viscoelastic foam*—a specially formulated urethane foam characterized by having slow recovery, low resilience, and high hysteresis loss.

4. Summary of Test Methods

4.1 Unless specifically stated otherwise between the supplier and the purchaser, all tests shall be made in accordance with the methods specified in Sections 9-124 which include test procedures for the following:

[1] These test methods are under the jurisdiction of ASTM Committee D20 on Plastics and are the direct responsibility of Subcommittee D20.22 on Cellular Materials-Plastics and Elastomers.

Current edition approved July 1, 2005. Published August 2005. Originally approved in 1977. Last previous edition approved in 2003 as D 3574 – 03.

[2] For referenced ASTM standards, visit the ASTM website, www.astm.org, or contact ASTM Customer Service at service@astm.org. For *Annual Book of ASTM Standards* volume information, refer to the standard's Document Summary page on the ASTM website.

***A Summary of Changes section appears at the end of this standard.**

Copyright © ASTM International, 100 Barr Harbor Drive, PO Box C700, West Conshohocken, PA 19428-2959, United States.

免费标准网(www.freebz.net) 无需注册 即可下载

免费标准网(www.freebz.net) 标准最全面

Tests:		Sections
Test A	Density Test	9-15
Test B_1	Indentation Force Deflection Test—Specified Deflection	16-22
Test B_2	Indentation Force Deflection Test—Specified Force	23-29
Test C	Compression Force Deflection Test	30-36
Test D	Constant Deflection Compression Set Test	37-44
Test E	Tensile Test	45-52
Test F	Tear Resistance Test	53-60
Test G	Air Flow Test	61-67
Test H	Resilience (Ball Rebound) Test	68-75
Test I_1	Static Force Loss Test at Constant Deflection	77-85
Test I_2	Dynamic Fatigue Test by the Roller Shear at Constant Force,	86-94
Test I_3	Dynamic Fatigue Test by Constant Force Pounding	95-103
Test I_4	Dynamic Fatigue Test for Carpet Cushion	104-112
Test J	Steam Autoclave Aging	113-118
Test K	Dry Heat Aging	119-124
Test L	Wet Heat Aging	125-130
Test M	Recovery Time	131-136

Appendixes:

X1. Suggested Method for Specifying Flexible Urethane Foams
X2. Suggested Method of Construction for a Roller Shear Dynamic Flex Fatigue Apparatus
X3. Definitions of Terms Used to Describe the Force-Deflection Curve of Flexible Urethane Foam
X4. Suggested Tests for Determining Combustibility of Flexible Urethane Foam. (The combustion tests are given for informational purposes only and are not part of the standard.)
X5. Suggested Method for Verification of an Inclined Oil Manometer
X6. Suggested Method for Measuring Hysteresis Loss of Foams

5. Significance and Use

5.1 The test procedures provide a standard method of obtaining data for research and development, quality control, acceptance and rejection under specifications, and special purposes.

5.2 The data obtained by these test methods are applicable to the material under conditions of the particular test and are not necessarily the same as obtained in other environments in use.

6. General Test Conditions

6.1 Tests shall be conducted under known conditions of temperature and humidity or as specified in the individual test procedure. The product shall be conditioned undeflected, and undistorted at the temperature and humidity of test for at least 12 h before being tested. In cases of dispute, the tests shall be made at a temperature of 23 ± 2°C and in an atmosphere of 50 ± 5 % relative humidity.

6.2 It is recommended for referee purposes that all tests shall be performed 7 days or more after the foam has been manufactured.

7. Sampling

7.1 When possible, the completed manufactured product shall be used for the test specified. Representative samples of the lot being examined shall be selected at random as required.

7.2 When it is necessary or advisable to obtain specimens from the articles, as in those cases where the entire sample is not required or adaptable for testing, the method of cutting and the exact position from which specimens are to be taken shall be specified. The density and the state of cure may vary in different parts of the finished product, especially if the article is of complicated shape or of varying thickness, and these factors affect the physical properties of the specimens. Also, the density is affected by the number of cut surfaces on the specimen. If a test specimen is die cut, sufficient time should be allowed for complete recovery of the thickness across the full width of the specimen.

7.3 When the finished molded product does not lend itself to testing or to the taking of specimens because of complicated shape, small size, metal or fabric inserts, adhesion to metal, or other reasons, molded test slabs as agreed upon between the supplier and the purchaser shall be prepared.

7.4 When differences in test results arise due to the difficulty in obtaining suitable specimens from the finished parts, the supplier and the purchaser may agree upon an acceptable location to take the specimen.

8. Measurement of Test Specimens

8.1 Measure the length and width with a scale or tape. Take care not to distort the foam.

8.2 Measure thickness up to and including 25 mm using a dial-type gage with a minimum foot area of 650 mm^2. Hold the pressure of the dial foot to 170 ± 35 Pa (Note 2). Thicknesses over 25 mm may be measured with a dial gage, a sliding caliper gage, or as specified in 8.1. When a sliding caliper gage is employed, make the gage setting with the gage out of contact with the foam. Pass the specimen through the previously set gage: the proper setting shall be the one when the measuring faces of the gage contact the surfaces of the specimen without compressing it.

NOTE 2—For soft foams having compression force deflection values less than 1.65 kPa, the pressure on the dial foot shall not exceed 100 Pa.

8.3 The scale, tape, or gage shall be graduated so as to permit measurements within ±1 % of the dimensions to be measured.

8.4 Unless otherwise specified, results shall be the mean of the measurements.

TEST A—DENSITY TEST

9. Scope

9.1 This test method covers determination of the density of uncored foam by calculation from the mass and volume of the specimen. The density value thus obtained applies only to the immediate area from which the specimen has been taken. It does not necessarily relate to the bulk density of the entire molded pad.

NOTE 3—ISO 845 is a similar test, but there are technical differences.

10. Test Specimen

10.1 *Core Density*—A representative specimen of regular shape, circular or square without skins or densification lines, not less than 1000 mm^3 in volume, shall be cut from a portion free of voids and defects and as near as possible to the section from which the tension and tear specimens were taken.

10.2 *Section Density*—A representative specimen with skins on the top and bottom surface measuring at least 0.1 m^2 in area by full-part thickness shall be cut from an area free of voids

Copyright by ASTM Int'l (all rights reserved);

免费标准网(www.freebz.net) 无需注册 即可下载

免费标准网(www.freebz.net) 标准最全面

and defects and as near as possible to the location from which the tension and tear specimens were taken. When these dimensions are not possible, the largest representative portion as agreed upon between the supplier and the purchaser shall be used.

11. Number of Specimens

11.1 One specimen shall be tested, unless otherwise agreed upon by the supplier and the purchaser.

12. Procedure

12.1 Determine the mass of the specimen within 1 %.

12.2 Determine the dimensions of the specimen in accordance with Section 8, and calculate the volume.

13. Calculation

13.1 Calculate the density in kilograms per cubic metre as follows:

$$\text{Density} = M/V \times 10^6 \quad (1)$$

where:

M = mass of specimen, g, and

V = volume of specimen, mm^3.

14. Report

14.1 Report the following information:

14.1.1 Density to the nearest 0.1 kg/m^3, and

14.1.2 Type of specimen, core or section.

15. Precision and Bias

15.1 See Section 137 for Precision and Bias statements.

TEST B_1 —INDENTATION FORCE DEFLECTION TEST—SPECIFIED DEFLECTION

16. Scope

16.1 This will be known as the indentation force deflection test and the results as the IFD values. This test consists of measuring the force necessary to produce designated indentations in the foam product, for example, 25 and 65 % deflections. (Appendix X3).

NOTE 4—ISO 2439 is a similar test, but there are technical differences.

17. Apparatus

17.1 An apparatus having a flat circular indentor foot 203 mm in diameter connected by means of a swivel joint capable of accommodating the angle of the sample to a force-measuring device and mounted in such a manner that the product or specimen can be deflected at a speed of 50 to 500 mm/min. The apparatus shall be arranged to support the specimen on a level horizontal plate which is perforated with approximately 6.5-mm holes on approximately 20-mm centers to allow for rapid escape of air during the test. Special support for contoured molded pads shall be perforated in the same manner as the flat plate unless agreed upon between the supplier and the purchaser. Pads longer than the base plate shall be supported from distortion at the 4.5-N contact force.

18. Test Specimen

18.1 The test specimen shall consist of the entire product sample or a suitable portion of it, except that in no case shall the specimen have dimensions less than 380 by 380 by 100 mm. Specimens less or different than 100 mm in thickness shall have the thickness noted on the test report.

18.2 The IFD values for molded products are dependent on the specimen dimensions. Higher values are generally obtained for specimens that retain all molded surfaces.

19. Number of Specimens

19.1 One specimen shall be tested, unless otherwise agreed upon by the supplier and the purchaser.

20. Procedure

20.1 Place the test specimen in position on the supporting plate of the apparatus. If the product has one side cored or honey-combed, this face shall rest on the perforated plate. The specimen position shall be such that whenever practicable the indentation will be made at the center of all articles, except where another location is agreed upon by the supplier and the purchaser.

20.2 Preflex the area to be tested by twice lowering the indentor foot to a total deflection of 75 to 80 % of the full-part thickness at a rate of 250 ± 25 mm/min. Mark the location of the test area with a pen by circumscribing the indentor foot while under a 4.5-N force. Allow the specimen to rest 6 ± 1 min after the preflex.

20.3 Bring the indentor foot into contact with the specimen and determine the thickness after applying a contact force of 4.5 N (Note 5) to the indentor foot. Indent the specimen at 50 ± 5 mm/min 25 % of this thickness and observe the force in newtons after 60 ± 3 s. Without removing the specimen increase the deflection to 65 % deflection, allowing the force to drift while maintaining the 65 % deflection, and again observe the force in newtons after 60 ± 3 s.

NOTE 5—For super-soft foam, foam with a 25 % IFD less than 40 N, a reduction of pressure on the indentor foot shall be allowed. Sufficient contact force to make an accurate initial thickness measurement is required.

21. Report

21.1 Report the force in newtons required for 25 and 65 % indentation or other indentations (Note 6). These figures are known as the 25 % and 65 % IFD values, respectively. Report also length, width, and thickness of the specimen, if non-standard and the ratio (support factor Appendix X3) of 65 % to 25 % IFD values.

NOTE 6—Indentation deflection tests, other than 25 and 65 %, as well as a 25 % return value (25 % RT), may be specified as agreed upon between the supplier and the purchaser.

22. Precision and Bias

22.1 See Section 137 for Precision and Bias statements.

--`,,`,,`,,`,`,,`,`,,`,,,`,,,`,,-`-`,,`,,`,`,,`---

Copyright by ASTM Int'l (all rights reserved);

免费标准网(www.freebz.net) 无需注册 即可下载

免费标准网(www.freebz.net) 标准最全面

TEST B_2 —INDENTATION RESIDUAL GAGE LENGTH TEST—SPECIFIED FORCE

23. Scope

23.1 Cellular foam products have been traditionally checked for indentation force deflection by determining the force required to effect a 25 % deflection. In seating, on the other hand, the interest is in determining how thick the padding is under the average person. Two measurements are called for to meet the requirements of this test method. The force deflection is determined by measuring the thickness of the pad under a fixed force of 4.5 N, 110 N, and 220 N, on a 323-cm^2 circular indentor foot.

23.2 This determination shall be known as the Indentation Residual Gage Length and the measurements as the IRGL values.

NOTE 7—ISO 2439 is a similar test, but there are technical differences.

24. Apparatus

24.1 An apparatus having a flat circular indentor foot 203 mm in diameter connected with a swivel joint for applying forces of 4.5 N, 110 N, 220 N and 330 N shall be mounted over a level horizontal platform that is perforated with approximately 6.5-mm holes on approximately 20-mm centers to allow for rapid escape of air during the test. The distance between the indentor foot and the platform shall be variable to indent the specimen at a speed of 50 to 200 mm/min for thickness measurements. The apparatus shall be equipped with a device for measuring the distance between plates.

24.2 Special support for contoured molded pads shall be perforated and agreed upon between the supplier and the purchaser. Pads longer than the base plate shall be supported from distortion at the 4.5-N contact force.

25. Test Conditions

25.1 When possible the completed manufactured product shall be used. In the case of tapered cushions, the location of the area for measurement is to be agreed upon between the supplier and the purchaser. In the case a finished part is not feasible for test, 380 by 380-mm specimens of an average thickness are to be cut from the cushion.

25.2 The IRGL values for molded products are dependent on the specimen dimensions. Difference values are generally obtained for specimens that retain all molded surfaces.

26. Number of Specimens

26.1 One specimen shall be tested, unless otherwise agreed upon by the supplier and the purchaser.

27. Procedure

27.1 Test the whole test specimen or a minimum area of 380 by 380 mm. Preflex the specimen twice with a 330 N force at 200 ± 20 mm/min. Allow to rest 6 ± 1 min. Position the specimen in the test apparatus with any cored or convoluted surfaces resting against the perforated bottom plate.

27.2 Bring the indentor foot into contact and determine the thickness of the specimen with the 4.5-N load on the indentor foot.

27.3 Apply the 110-N force at 50 ± 5 mm/min with the indentor foot and indent the specimen until the force is carried by the specimen. Determine the thickness at 110 N after maintaining the force for 60 ± 3 s.

27.4 Without removing the specimen apply the 220-N force at 50 ± 5 mm/min with the indentor foot and further indent the pad until this load is carried. After 60 ± 3 s under load, determine the thickness of the pad.

28. Report

28.1 Report the specimen thickness after 60 ± 3 s at 4.5 N, 110 N, and 220 N. These figures are known as the IRGL values, respectively. Report also the length, width, and thickness of the specimen.

29. Precision and Bias

29.1 See Section 137 for Precision and Bias statements.

TEST C—COMPRESSION FORCE DEFLECTION TEST

30. Scope

30.1 This test consists of measuring the force necessary to produce a 50 % compression over the entire top area of the foam specimen.

NOTE 8—ISO 3386 is a similar test, but there are technical differences.

NOTE 9—Compression deflection tests other than at 50 % may be specified as agreed upon between the supplier and the purchaser.

31. Apparatus

31.1 An apparatus having a flat compression foot, larger than the specimen to be tested connected to a force-measuring device and mounted in a manner such that the product or specimen can be deflected at a speed of 50 to 500 mm/min. The apparatus shall be arranged to support the specimen on a level horizontal plate that is perforated with approximately 6.5-mm holes on approximately 20-mm centers to allow for rapid escape of air during the test.

32. Test Specimens

32.1 The slab test specimen shall have parallel top and bottom surfaces and essentially vertical sides. The thickness shall be no greater than 75 % of the minimum top dimension. The standard specimen shall be 50 mm by 50 mm by 25 mm in thickness.

32.2 Specimens from uncored slab stock shall be a minimum of 2000 mm^2 in area and have a minimum thickness of 20 mm.

32.3 The test specimen from molded parts shall have parallel top and bottom surfaces and perpendicular sides. Preferably the specimen should include both top and bottom molded skins. If a test specimen with parallel top and bottom surfaces including both molded skins cannot be obtained because of the shape of the molded part, at least one of the molded skin surfaces should be retained. Both surface skins should be removed only in cases where the shape of the original sample makes this absolutely necessary.

32.4 Maximum molded specimen thickness shall be no greater than the minimum top dimensions. Specimens from

Copyright by ASTM Int'l (all rights reserved);

免费标准网(www.freebz.net) 无需注册 即可下载

免费标准网(www.freebz.net) 标准最全面

molded parts shall be a minimum of 2000 mm^2 in area and have a minimum thickness of 20 mm.

33. Number of Specimens

33.1 Three specimens per sample shall be tested. The value reported shall be the mean value of those observed.

34. Procedure

34.1 Preflex the specimen twice, 75 to 80 % of its original thickness at 250 ± 25 mm/min. Then allow the specimen to rest for a period of 6 ± 1 min.

34.2 Place the specimen centered in the line of the axial load on the supporting plate of the apparatus. If the product has one side cored or convoluted, rest this face on the perforated plates.

34.3 Bring the compression foot into contact with the specimen and determine the thickness after applying a contact load of 140 Pa to the specimen area (Note 2). Compress the specimen 50 % of this thickness at 50 ± 5mm/min and determine the final force after 60 ± 3 s.

35. Report

35.1 Report the thickness after contact force, and the 50 % compression deflection value in kilopascals and the dimensions of non-standard specimens. Indicate if the sample was cored or convoluted.

36. Precision and Bias

36.1 See Section 137 for Precision and Bias statements.

TEST D—CONSTANT DEFLECTION COMPRESSION SET TEST

37. Scope

37.1 This test method consists of deflecting the foam specimen to a specified deflection, exposing it to specified conditions of time and temperature and measuring the change in the thickness of the specimen after a specified recovery period.

NOTE 10—ISO 1856 is a similar test, but there are technical differences.

38. Apparatus

38.1 *Compression Device*, consisting of two or more flat plates arranged so the plates are held parallel to each other by bolts or clamps and the space between the plates is adjustable to the required deflection thickness by means of spacers.

39. Test Specimens

39.1 The test specimens shall have parallel top and bottom surfaces and essentially perpendicular sides.

39.2 Specimens shall be 50 by 50 by 25 mm unless otherwise specified. Specimens less than 25 mm in thickness shall be plied up, without the use of cement, to a 25-mm thickness.

39.3 Specimens from cored foams shall have a minimum top surface area of 100 cm^2. The thickness shall be no greater than 75 % of the minimum top dimension.

39.4 Specimens from uncored molded products 25 mm or less in thickness shall be 50 by 50 mm by full-part thickness and shall contain the top and bottom skin.

39.5 Specimens greater than 50 mm in thickness shall be cut to 25 mm thickness from the core. (Note 11)

NOTE 11—Specimens from molded products may be tested with one or both skins by agreement between the customer and the supplier.

40. Number of Specimens

40.1 Three specimens per sample shall be tested. The value reported shall be the mean of those observed.

41. Procedure

41.1 Perform the entire test procedure under the following conditions: Conduct all measurements, conditioning, and recovery of the specimen at 23 ± 2°C and in an atmosphere of 50 ± 5 % relative humidity. The oven conditions shall be 70 ± 2°C and 6 % maximum relative humidity.

NOTE 12—This condition of relative humidity may be achieved by placing an oven at 70 ± 2°C in an atmosphere maintained at 23 ± 2°C and 50 ± 5 % relative humidity.

41.2 Measure the original thickness of the test specimen in accordance with the procedure described in Section 8.

41.3 Place the test specimen in the apparatus and deflect it to either 50 ± 1, 75 ± 1, or 90 ± 1 % of its thickness, or any other deflection agreed upon between the supplier and the purchaser.

41.4 Within 15 min, place the deflected specimen and the apparatus in the mechanically convected air oven for a period of 22 h; then remove the apparatus.

41.5 Remove the specimen immediately from the apparatus and measure the final thickness in accordance with the procedure described in Section 8 after allowing it to recover 30 to 40 min at the temperature and humidity conditions specified in 41.1.

NOTE 13—Recovery periods greater than 30 to 40 min may be agreed upon by the supplier and the purchaser.

42. Calculation

42.1 Calculate the compression set value by one of the following formulas:

NOTE 14—The C_t calculation is preferred and shall be the calculation used when neither C_t and C_d are specified.

42.1.1 Calculate the constant deflection compression set, expressed as a percentage of the original thickness, as follows:

$$C_t = [(t_o - t_f)/t_o] \times 100 \quad (2)$$

where:

C_t = compression set expressed as a percentage of the original thickness,
t_o = original thickness of test specimen, and
t_f = final thickness of test specimen.

42.1.2 Calculate the constant deflection compression set, expressed as a percentage of the original deflection, as follows:

$$C_d = [(t_o - t_f)/(t_o - t_s)] \times 100 \quad (3)$$

where:

C_d = compression set expressed as a percent of the original deflection,
t_o = original thickness of test specimen,

Copyright by ASTM Int'l (all rights reserved);

免费标准网(www.freebz.net) 无需注册 即可下载

免费标准网(www.freebz.net) 标准最全面

t_s = thickness of spacer bar used, and
t_f = final thickness of test specimen.

NOTE 15—Approximate conversion of C_t to C_d can be calculated by multiplying the 50 % C_t by 2, the 75 % C_t by 1.33, and the 90 % C_t by 1.11.

43. Report

43.1 Report compression set as C_t or C_d, and deflection used. Also report any non-standard recovery periods or sample sizes and whether the sample was cored, uncored and/or molded.

44. Precision and Bias

44.1 See Section 137 for Precision and Bias statements.

TEST E—TENSILE TEST

45. Scope

45.1 This test method determines the effect of the application of a tensile force to foam. Measurements are made for tensile stress, tensile strength, and ultimate elongation.

NOTE 16—ISO 1798 is a similar test, but there are technical differences.

46. Apparatus

46.1 *Specimens*—The specimen for tensile tests shall be stamped out with a die of the shape and dimensions shown in Fig. 1, or Die A of Test Methods D 412. The die shall be sharp and free of nicks in order to prevent leaving ragged edges on the specimen. The D 412 Die is the preferred die and is identical in dimensions to the ISO 1798 Die.

46.2 *Bench Marker*—The marker shall have two parallel marking edges 1 to 3 mm in thickness and spaced 20 or 25 mm apart on centers.

46.3 *Measurements*—The dimensions of the test specimen shall be determined with a suitable gage in accordance with Section 8.

46.4 Machine—Tensile tests shall be made on a power-driven machine complying with the following requirements:

46.4.1 The machine shall be equipped with a load cell or force measuring device that can measure the maximum applied force. The test speed shall be 500 ± 50 mm/min, and shall be uniform at all times.

46.4.2 The machine may be equipped with a device graduated to 2.5 mm for measuring the elongation. The use of non-contact extensometers may similarly be used for determining elongation. Extensometers that clip on to the specimen generally are unsuitable for flexible foam. For testing dumbbell specimens, the machine shall have either screw-type flat plate grips or a type of grip that tightens automatically and exerts a uniform pressure across the gripping surfaces, increasing as the tension increases to prevent slipping.

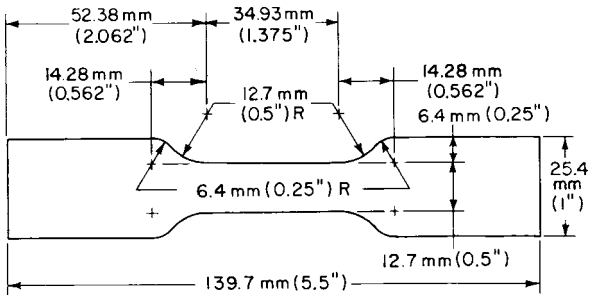

FIG. 1 Die for Stamping Tension Specimens

47. Test Specimens

47.1 The test specimens shall be cut from flat sheet material 12.5 ± 1.5 mm thick. The foam rise shall be in the thickness direction, unless otherwise agreed upon by customer and supplier. The top and bottom surfaces shall be parallel and free of skin. The cut edges shall be perpendicular to the top surface and be free of ragged edges. The length of the tabs may be adjusted to fit machine conditions provided that all other requirements remain constant.

48. Number of Specimens

48.1 Three specimens per sample shall be tested. The value reported shall be the mean value of those observed.

49. Procedure

49.1 Set the grip separation at a minimum of 62.5 mm for the D 3574 Die and at a minimum of 75 mm for the D 412 Die A. Place the dumbbell tabs in the grips of the testing machine, using care to adjust them symmetrically, in order that the tension will be distributed uniformly over the cross section. The test shall be run at a speed of 500 ± 50 mm/min, unless otherwise specified by agreement between customer and supplier. Start the machine and note continuously the distance between the two bench marks. Record the stress at the corresponding elongation or if an automatic recording device is used, it will record the data continuously. At rupture, measure or record elongation to the nearest 10 %.

50. Calculation

50.1 Calculate the tensile strength by dividing the maximum breaking force by the original cross-sectional area of the specimen.

50.2 Calculate the stress by dividing the force at a predetermined elongation by the original cross-sectional area of the specimen.

50.3 Calculate the ultimate elongation, A, by subtracting the original distance between the bench marks from the total distance between the bench marks at the time of rupture and expressing the difference as a percentage of the original distance, as follows, or use the grip separations in a similar calculation.

$$A, \% = [(d_f - d_o)/d_o] \times 100 \quad (4)$$

where:
d_o = original distance between bench marks, and
d_f = distance between bench marks at the break point.

50.4 The value reported shall be the mean value of all specimens tested.

51. Report

51.1 Report the following information:

51.1.1 Tensile strength in kilopascals,

Copyright by ASTM Int'l (all rights reserved);

免费标准网(www.freebz.net) 无需注册 即可下载

免费标准网(www.freebz.net) 标准最全面

51.1.2 Stress in kilopascals at a predetermined elongation, and

51.1.3 Ultimate elongation, in percent, and whether bench marks, grip separation or extensometers were used to measure elongation.

51.1.4 Crosshead speed, if other than 500 mm/min.

52. Precision and Bias

52.1 See Section 137 for Precision and Bias statements.

TEST F—TEAR RESISTANCE TEST

53. Scope

53.1 This test method covers determination of the tear propagation resistance of foam. The block method, as described, measures the tear resistance under the conditions of this particular test.

NOTE 17—ISO 8067 is a similar test, but there are technical differences.

54. Apparatus

54.1 Tear resistance shall be measured on a power-driven apparatus which will indicate the force at which rupture of the specimen takes place. An automatic machine may be used which draws the actual curve, or, a style or scale shall be used having an indicator that remains at the point of maximum force after rupture.

55. Test Specimens

55.1 The test specimens shall be a block shape free of skin, voids, and densification lines, as shown in Fig. 2. They may be cut on a saw or die cut from sheet material so that the sides are parallel and perpendicular to each other. A nominal 40-mm cut shall be placed in one side as shown in Fig. 2. Dimension *A-B* can be reduced to the pad thickness. The thickness shall be determined in accordance with Section 8.

56. Number of Specimens

56.1 Three specimens per sample shall be tested. The values reported shall be the mean of those tested.

57. Procedure

57.1 Clamp the test specimen in the jaws of the testing machine, taking care that the jaws grip the specimen properly. Spread the block so that each tab is held in the jaw to pull across the specimen. The test shall be run at a speed of 500 ± 50 mm/min, unless otherwise specified by agreement between customer and supplier. Aid the cut in the specimen with a razor blade or knife, so as to keep it in the center of the block (Note 18). After the rupture of the specimen, or after at least a 50-mm length is torn, record the maximum force in Newtons and note also the thickness of the specimen (direction *A-B*).

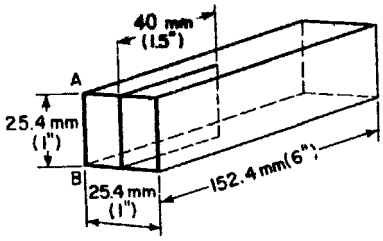

FIG. 2 Tear Resistance Test Specimens

NOTE 18—For foams that will not tear by this method side by side tear strength comparisons can be made by testing in accordance with Test Method D 624. It should be noted that the D 624 test is a tear initiating measurement as opposed to a tear propagating measurement in this block tear test.

58. Calculation

58.1 Calculate the tear strength from the maximum force registered on the testing machine and the average thickness of the specimen (direction *A-B*), as follows:

$$\text{Tear strength, N/m} = F/T \times 10^3 \quad (5)$$

where:

F = force, N, and

T = thickness, mm.

59. Report

59.1 Report the following information:

59.1.1 Tear strength in newtons per metre,

59.1.2 Orientation of specimen, and

59.1.3 Crosshead speed, if other than 500 mm/min.

60. Precision and Bias

60.1 See Section 137 for Precision and Bias statements.

TEST G—AIR FLOW TEST

61. Scope

61.1 The air flow test measures the ease with which air passes through a cellular structure. Air flow values may be used as an indirect measurement of certain cell structure characteristics. The test consists of placing a flexible foam core specimen in a cavity over a chamber and creating a specified constant air-pressure differential. The rate of flow of air required to maintain this pressure differential is the air flow value This test is normally for slab foam products or for the core materials of molded products. Measurements of air flow through molded skins or extremely high air flow products may require alternative methods (Note 20).

NOTE 19—ISO 7231 is an identical test.

NOTE 20—For measuring air flow of products, such as viscoelastic foams, which can have air flows beyond the range of this method, success has been achieved using the equipment specified in Test Method D 737. Some modification of the equipment may be necessary.[3] For surface porosity of molded foams see Test Method D 726.

62. Terminology

62.1 *Definitions of Terms Specific to This Standard:*

62.1.1 *air flow value*—the volume of air per second at standard temperature and atmospheric pressure required to maintain a constant pressure differential of 125 Pa across a flexible foam specimen approximately 50 by 50 by 25 mm.

[3] Gummaraju, R.V., Pask, R.F., Koller, H.J., Wujcik, S.E., and Reimann, K.A., "Evaluation, Modification and Adaptation of an Airflow Test Method for Polyurethane Foams," *Journal of Cellular Plastics*, May/June 2001.

Copyright by ASTM Int'l (all rights reserved);

免费标准网(www.freebz.net) 无需注册 即可下载

免费标准网(www.freebz.net) 标准最全面

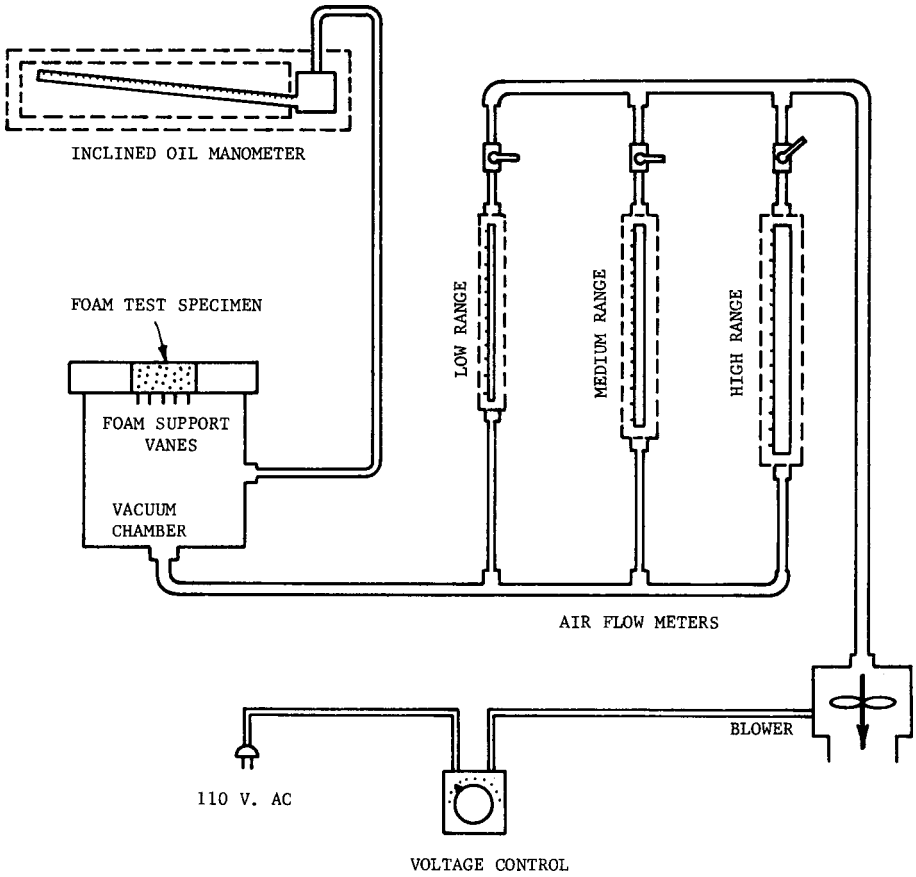

FIG. 3 Air Flow Apparatus Schematic Diagram

62.1.2 *air flow parallel to foam rise*—the air flow value obtained when the air enters and leaves the mounted specimen parallel to foam rise.

62.1.3 *air flow perpendicular to foam rise*—the air flow value obtained when the air enters and leaves the specimen perpendicular to foam rise.

63. Apparatus

63.1 A schematic drawing of the apparatus including the specimen mounting chamber, manometer, air flowmeters, blowmeters, blower, and voltage control is shown in Fig. 3.[4]

63.2 *Chamber*, consisting of a pot approximately 130 mm in diameter and 150 mm high with provision for mounting the foam specimen and fittings for the manometer and air exhaust. The specimen mount cavity shall be 50.0 ± 0.5 by 50.0 ± 0.5 by 25.0 ± 0.5 mm in size. Four foam support vanes approximately 1 mm thick and 12.5 mm high shall be placed under the opening to prevent the foam from being pulled into the vacuum chamber. The vanes shall be spaced 12.5 mm on center from each other and also centered relative to the bottom of the cavity opening. The manometer fitting shall enter a 1-mm hole midway along the side of the chamber. A 25-mm pipe fitting shall be used as the exhaust outlet from the center of the bottom of the chamber.

63.3 *Manometer*, calibrated from 0 to 250 Pa and having an accuracy of ±2 %, is required. An inclined oil manometer with graduations of 2 Pa is recommended. A level mounted on the manometer shall be used to ensure that the proper degree of inclination from the horizontal is maintained. Traps shall be provided to prevent indicating fluid from being accidentally drawn into the chamber. Appendix X5. describes a suggested method for the verification of the inclined oil manometer, the manometer can alternatively be replaced with a 0-250 Pa magnehelic gage with graduations in 5 Pa.

63.4 *Flowmeters and Blower*—Low-pressure-drop air flowmeters accurate to ±2 % shall be used for air-flow measurements. A given flowmeter should not be used for values less than 10 % of full scale. Air flowmeters with at least 250-mm scales are recommended. Since the flowmeter calibration is temperature-and pressure-dependent, the use of the apparatus under ambient conditions can result in erroneous readings. In cases of dispute, the apparatus should be used under standard conditions of 23°C and 100 kPa (1 atm pressure) or else a suitable calibration correction applied. Flowmeters that range from 0 to 0.01 m^3 /s will cover a wide range of foam cell structures but a lesser range may be used. Actual flow is adjusted by a combination of valve restriction and blower speed. The two-way valves shall be mounted on the output side

[4] The sole source of supply of an electronic instrument that has proven to be effective for measuring air flow, which is known to the committee at this time is ONIX Process Analysis, Inc., 1201 N. Velasco, Angleton, TX 77515. If you are aware of alternative suppliers, please provide this information to ASTM International Headquarters. Your comments will receive careful consideration at a meeting of the responsible technical committee,[1] which you may attend.

Copyright by ASTM Int'l (all rights reserved);

免费标准网(www.freebz.net) 无需注册 即可下载

免费标准网(www.freebz.net) 标准最全面

of the flowmeter to maintain the pressure drop across the flowmeter constant at any given flow level. A vacuum cleaner type unit shall be used for an exhaust blower.

63.5 *Leak Test*—To check the apparatus for leaks, the specimen mount cavity shall be sealed with masking tape. With all valves closed, turn on the exhaust blower to approximately ⅓ power and observe any movement of the manometer. The manometer reading, if any, should not exceed 1 Pa after a 30-s waiting period. Next, open the valve very slightly for the lowest range flowmeter reading. The flow should be essentially zero as evidenced by less than 3-mm movement of the air flowmeter float from its static position. For the equipment to perform satisfactorily over its entire range the requirements for both parts of the leak test must be met.

64. Test Specimens

64.1 The test specimens shall be parallel-piped cut to fit the mount cavity of the apparatus. A cavity 50 by 50 mm requires a specimen 51.0 ± 0.3 by 51.0 ± 0.3 by 25.0 ± 0.5 mm in size. A band saw with a movable table and a double-bevel knife-edge blade is recommended for cutting the specimens.

64.2 Three specimens per sample for each location and orientation to be tested shall be cut. The values reported shall be the mean of those observed for each location and orientation.

65. Procedure

65.1 Measure each specimen in accordance with the procedure described in Section 8 to verify the specimen size.

65.2 Insert the specimen into the test cavity. Make sure that a good air seal is obtained along all edges. The top of the specimen should be flush with the top of the test chamber.

65.3 With all valves closed, adjust the voltage control of the apparatus to 30 %.

65.4 Open one flow-control valve slowly until a pressure differential to 100 to 150 Pa is obtained. Adjust the voltage control carefully to obtain a pressure differential of 125 ± 1 Pa.

65.5 After this pressure differential has been maintained for at least 10 s, read the scale of the flowmeter.

65.6 If this reading is off-scale or less than 10 % of full scale, close that flow-control valve and open a more appropriate one. Repeat this process until the proper manometer reading and air flow is achieved.

65.7 The air flow value may be obtained from the flowmeter scale directly, estimated from a calibration chart, or calculated with a factor depending on the calibration system.

66. Report

66.1 Report the following information:

66.1.1 Location and orientation of each specimen with respect to foam rise in the section of foam that was sampled,

66.1.2 Mean air flow value in cubic metres per min for each location and orientation,

66.1.3 Dimensions of the specimen, and

66.1.4 Dimension of the mount cavity of the apparatus.

67. Precision and Bias

67.1 See Section 137 for Precision and Bias statements.

TEST H—RESILIENCE (BALL REBOUND) TEST

68. Scope

68.1 This test consists of dropping a steel ball on a foam specimen and noting the height of rebound.

NOTE 21—ISO 8307 is an identical test.

69. Apparatus

69.1 The ball rebound tester shall consist of a 40 ± 4-mm inside diameter vertical clear plastic tube, such as acrylic, into which a 16.03 ± 0.2-mm diameter steel ball is released by a magnet or other device. The steel ball must be released so that it falls without rotation. Centering of the ball is assured by a recess at the base of the magnet. The height of drop shall be 500 mm. Since it is most convenient to note the position of the top of the ball on rebound, the top of the ball shall be 516 mm above the surface of the foam. Thus, "zero" rebound shall be 16.3 ± 0.2 mm (diameter of ball) above the specimen surface. The scale on the tube shall be scribed directly in percent as follows. Every 5 % a complete circle shall be scribed and every 1 % a 120° arc shall be scribed. The complete circles are an essential part of the apparatus, since they are used to eliminate parallax error.

70. Test Specimens

70.1 The test specimens shall have parallel top and bottom surfaces.

70.2 The test specimens shall consist of the entire product sample or a suitable portion of it, except that in no case shall the thickness be less than 30 mm. The standard specimen size shall be 100 mm by 100 mm by 50 mm. For molded products the top skin shall be removed.

71. Number of Specimens

71.1 Three specimens per sample shall be tested. The three specimens may be obtained by using separate items or different locations on a given item.

72. Procedure

72.1 Center the specimen at the base of the tube and adjust the height of the tube so that zero rebound is 16 mm above the surface of the foam specimen.

72.2 Mount the steel ball on the release mechanism; then drop it and note the maximum rebound height. If the ball strikes the tube on the drop or rebound, the value obtained is invalid. This condition is usually due to the tube not being vertical or irregularities on the specimen surface. In order to minimize parallax error, the circles on the tube in the region where the percent rebound is read must appear as lines.

72.3 Make an additional two drops on the same specimen in the same location unless agreed upon by customer and supplier.

73. Calculation

73.1 Calculate the mean of the three rebound values.

74. Report

74.1 Report the mean of the three specimen mean values as the ball rebound resilience value of the sample in percent.

Copyright by ASTM Int'l (all rights reserved);

免费标准网(www.freebz.net) 无需注册 即可下载

免费标准网(www.freebz.net) 标准最全面

74.2 Report if measurements were made at different specimen locations or on different specimens.

75. Precision and Bias

75.1 See Section 137 for Precision and Bias statements.

TEST I—FATIGUE TESTS

76. Scope

76.1 The fatigue tests consist of four methods:

76.1.1 Static Force Loss Test at Constant Deflection,

76.1.2 Dynamic Fatigue by Roller Shear at Constant Force,

76.1.3 Dynamic Fatigue Test by Constant Force Pounding, and

76.1.4 Dynamic Fatigue Test for Carpet Cushion.

TEST I_1 —STATIC FORCE LOSS TEST AT CONSTANT DEFLECTION

77. Scope

77.1 The purpose of this static force loss test is to determine: (*1*) a loss of IFD, (*2*) a loss of thickness, and (*3*) structural breakdown by visual examination.

77.2 This procedure tests the specimen at a 75 % constant deflection.

NOTE 22—No similar ISO standard exists.

78. Apparatus

78.1 The apparatus shall consist of two parallel plates (wood or metal) which can produce a uniform, constant deflection of the specimen. The plates shall be 500 by 500 mm square, and spacer bars or other appropriate means shall be employed to maintain a constant 75 % deflection throughout the test.

79. Test Specimen

79.1 The test specimen shall be 380 by 380 mm by the desired thickness. One specimen shall be tested.

80. Initial Measurements

80.1 Measure the 25 and 65 % IFD of the test specimen in accordance with Sections 16 to 22. Measure the original thickness with 4.5-N contact force after preflexing.

81. Procedure

81.1 Place the specimen between the plates with the spacer bars to provide a 75 % deflection. Clamp the plates and hold at 75 % deflection for 22 h at 23 ± 2°C and 50 ± 5 % relative humidity.

82. Final Measurements

82.1 Measure the final IFD values 60 ± 5 min after the fatigue test is completed in accordance with 80.1 using the original thickness to determine the deflection for the final IFD values.

82.2 If the loss in thickness is above 10 %, the IFD losses shall not be measured and only the thickness loss shall be reported.

82.3 For a measurement of more permanent fatigue, repeat 82.1, except allow 24 ± 1 h of recovery time rather than 60 min.

83. Calculation and Inspection

83.1 Check the specimen for physical breakdown of the cellular structure by visual examination and comparison with unflexed specimens.

83.2 Calculate the percentage loss of thickness as follows:

$$F_t = \frac{(t_o - t_f)}{(t_o)} \times 100 \quad (6)$$

where:

F_t = loss in thickness, %,

t_o = original specimen thickness, and

t_f = final specimen thickness.

83.3 Calculate the percentage loss of IFD, as follows:

$$F_L = \frac{(L_o - L_f)}{(L_o)} \times 100 \quad (7)$$

where:

F_L = loss of indentation force deflection, %,

L_o = original indentation force deflection value, and

L_f = final indentation force deflection value.

84. Report

84.1 Report the following information:

84.1.1 Percentage loss of thickness and the percentage loss of 25 and 65 % IFD if the thickness loss is less than 10 %, and

84.1.2 Results of visual examination.

84.1.3 Recovery time whether 60 min or 24 h.

85. Precision and Bias

85.1 Round robin testing to determine the precision of this method is being planned and the data will be available by the end of 2006.

TEST I_2 —DYNAMIC FATIGUE TEST BY THE ROLLER SHEAR AT CONSTANT FORCE

86. Scope

86.1 This procedure fatigues the specimen dynamically at a constant force, deflecting the material both vertically and laterally.

86.2 The fatigue test may be conducted by either Procedure A or Procedure B. Both test procedures are the same and differ only in the number of cycles used. Procedure A shall use 8000 cycles (approximately 5 h) and Procedure B shall use 20 000 cycles (approximately 12 h).

NOTE 23—No similar ISO standard exists.

NOTE 24—The mass of the roller and the number of cycles may be changed as agreed upon between the supplier and the purchaser.

Copyright by ASTM Int'l (all rights reserved);

免费标准网(www.freebz.net) 无需注册 即可下载

免费标准网(www.freebz.net) 标准最全面

87. Apparatus (Appendix X2)

87.1 *Perforated-Base Platen*, approximately 500 by 500 by 10 mm with a finished ground-top surface and with perforation of approximately 6.5-mm centers covering the center 360 by 360-mm portion.

87.2 *Roller*, 450-mm minimum length and 76.0 ± 1.3 mm-diameter made from stainless steel or chrome-plated metal having a minimum surface finish of 1 µm. The roller shall be mounted in an offset position (15 ± 3°) with suitable means of adjustment for a specified loading of the test specimen. The force imparted by the roller assembly shall not exceed 110 N.

87.3 The test is conducted at a frequency of 0.50 ± 0.05 Hz. A cycle is a complete forward and reverse stroke. The length of the stroke shall be 300 ± 10 mm.

87.4 Any suitable method for holding the test specimen securely on the roller base platen is acceptable as long as the test specimen remains stationary during the rolling flex cycles. An acceptable method for retaining the specimen on the base platen is described as follows: Four pieces of cotton sheeting or paper masking tape 50 to 75 mm wide at least 50 mm longer than each side of the test specimen shall be required. Bond the cotton strips (with a solvent or water-emulsion-type of adhesive) or the masking tape along the edges of the base surface of the test specimen. Allow 25 to 50 mm of each strip to extend beyond the edges of the test specimen so that the test specimen can be securely clamped to the base platen through the use of suitable metal retainer straps.

88. Test Specimen

88.1 A specimen 380 mm long by 300 mm wide by 50 mm thick is used. The thickness of specimens tested should be at least 25 mm and no greater than 125 mm. Normally full-part thickness is used where the top and bottom surfaces are essentially parallel and fall within the thickness limits. Where part thickness exceeds 125 mm or the bottom surface is contoured so that the surfaces are not essentially parallel, the bottom surface shall be sliced to provide a flat surface essentially parallel to the top surfaces (see Section 7).

88.2 The length and width dimensions shall be held to ±6.5 mm and shall be saw cut or die cut; if die cut, sufficient time must be allowed for complete edge recovery (usually 2 h minimum).

88.3 One specimen shall be tested, unless otherwise agreed upon by the supplier and the purchaser.

89. Initial Measurements

89.1 Bond the masking tape or suitable hold-down cloth to the bottom edges of the specimen so the specimen can be secured to the perforated base platen of the fatigue tester.

89.2 Condition the specimen as in Section 6. The test should also be run under the same conditions.

89.3 Determine the IRGL in accordance with Sections 23-29.

90. Procedure

90.1 Adjust the roller to obtain a constant force of 130 ± 2 N on the foam specimen (Note 24). This critical measurement may be made by fashioning a lightweight fabric sling around the roller at its center and measuring the force downward while holding the weighing scale vertically over the roller and maintaining the roller axis in a horizontal plane with the pivot axis.

90.2 Set the vertical adjustment of the roller or the mounting base by placing the specimen in position and lowering the roller so it is supported by the specimen. Observe the pivot axis and roller axis relationship and adjust the vertical height so that the axes lie in an essentially horizontal plane at the start of the test.

90.3 Mount the test specimen on the base platen with the long dimension parallel to the stroke of the dynamic fatigue machine and secure by means of the tape and metal-retainer strips. When mounting cored pieces, coring is to be against the platen. Set the counter to zero, start the machine, and fatigue test the sample for either 8000 cycles (Procedure A) or 20 000 cycles (Procedure B) or another number of cycles specified by the customer.

91. Final Measurements

91.1 Within 60 ± 5 min after the fatigue test is completed, measure the final IRGL in accordance with 89.3.

91.2 For a measurement of more permanent fatigue repeat 91.1, except allow 24 ± 1 h of recovery rather than 60 min.

92. Calculation and Inspection

92.1 Check the specimen for physical breakdown of cellular structure by visual examination and comparison with unflexed similar specimens.

92.2 Calculate and report the percent loss in thickness as follows:

$$\text{Thickness loss, \%} = \frac{[100(A - B)]}{(A)} \tag{8}$$

where:

A = original thickness under compression forces of 4.5 N, 110 N, and 220 N, and

B = final thickness under the same indentation forces.

92.3 If requested by the customer, calculate the total loss number as follows:

$$\text{Total loss number} = \text{sum of \% losses at each load} \tag{9}$$

Sample Calculation:

Percent thickness loss at 4.5 N = 2.0
Percent thickness loss at 110 N = 18.0
Percent thickness loss at 220 N = 27.0
Total loss number 47.0

93. Report

93.1 Report the following information:

93.1.1 Percentage loss of thickness and IRGL values.

93.1.2 The number of cycles.

93.1.3 Total loss number, if requested.

93.1.4 Results of visual examination.

93.1.5 Recovery time whether 60 min or 24 h.

94. Precision and Bias

94.1 Round robin testing to determine the precision of this method is being planned and the data will be available by the end of 2006.

Copyright by ASTM Int'l (all rights reserved);

免费标准网(www.freebz.net) 无需注册 即可下载

免费标准网(www.freebz.net) 标准最全面

TEST I_3 —DYNAMIC FATIGUE TEST BY CONSTANT FORCE POUNDING

95. Scope

95.1 The purpose of the fatigue test is to determine: (*1*) the loss of force support at 40 % IFD (indentation force deflection), (*2*) a loss in thickness, and (*3*) structural breakdown as assessed by visual inspection. Deflections other than 40 % may be used as agreed upon between supplier and purchaser.

95.2 This procedure describes tests that evaluate the specimen by repeatedly deflecting the material by a flat-horizontal indention exerting a vertical force of 750 ± 20 N on the test specimen.

95.3 This fatigue test may be conducted by Procedure A, Procedure B, or Procedure C. Procedures A and B differ only in the number of cycles used. Procedure A shall use 8000 cycles (approximately 2 h) and Procedure B shall use 80 000 cycles (approximately 19 h). Procedure C calls for 12 000 cycles at a slower cycling rate (approximately 20 h). See 96.3.

NOTE 25—The equipment in this standard is identical to ISO 3385, but there are technical differences in the two methods.

96. Apparatus

96.1 *Perforated Base Platen*, approximately 500 by 500 by 10 mm, with finished ground-top surface and with perforation of approximately 6.5-mm diameter holes on 20-mm centers, over a minimum central area of 350 by 350 mm.

96.2 A flat circular indentor that exerts a force of 750 ± 20 N on the test specimen at maximum indentation. The indentor shall have an overall diameter of 250 ± 1 mm with a 25 ± 1-mm radius at the lower edge, to prevent cutting hard foam.

96.3 By means of a crank or other suitable mechanism, the machine shall be capable of oscillating either the platen carrying the test specimen or the indentor support mounting towards each other in a vertical direction at a frequency of 70 ± 5 cycles per minute. For Procedure C the frequency shall be 10 ± 1 cycles per minute.

96.4 The indentor shall be free to be lifted in its mounting to prevent overloading of the test specimen.[5]

97. Test Specimen

97.1 The test specimen shall be 380 by 380 by 50 mm. One specimen shall be tested, unless otherwise agreed upon by the supplier and the purchaser.

98. Initial Measurement

98.1 The specimen shall be conditioned for at least 12 h and also fatigued at 23 ± 2°C and 50 ± 5 % relative humidity.

98.2 Measure the 40 % IFD of the test specimen in accordance with Sections 16-22. Measure the original thickness with 4.5-N contact force after preflexing.

99. Procedure

99.1 Mount the specimen on the base platen. Set the counter to zero, start the machine, and fatigue the test specimen for 8000 cycles (Procedure A), 80 000 cycles (Procedure B), or 12 000 cycles (Procedure C). Procedure C shall be used for slow recovery (viscoelastic) foams where the cycle speed is slow enough to allow enough time between cycles for the foam to recover its height.

100. Final Measurement

100.1 Within 60 ± 5 min after the fatigue test is completed, repeat 98.2 using the original thickness to determine the deflection for the final force reading.

100.2 For a measurement of more permanent fatigue repeat 100.1, except allow 24 ± 1 h of recovery rather than 60 min.

100.3 If the loss in thickness is above 10 %, IFD loss shall not be measured and only the thickness loss should be reported.

101. Calculation and Inspection

101.1 Check the specimen for physical breakdown of the cellular structure by visual examination and comparison with unflexed specimens.

101.2 Calculate the percent loss of thickness as follows:

$$F_t = \frac{(t_o - t_f)}{(t_o)} \times 100 \quad (10)$$

where:
F_t = loss in thickness, %,
t_o = original specimen thickness, and
t_f = final specimen thickness.

101.3 Calculate the percent loss of force deflection, as follows:

$$F_L = \frac{(F_o - F_f)}{F(L_o)} \times 100 \quad (11)$$

where:
F_L = loss of 40 % indentation force deflection, %,
F_o = original 40 % indentation force deflection value, and
F_f = final indentation force deflection value.

102. Report

102.1 Report the following information:

102.1.1 Percent change in thickness and the percent change in 40 % IFD if the thickness change is less than 10 %, and

102.1.2 Results of visual examination.

102.1.3 Recovery time whether 60 min or 24 h.

103. Precision and Bias

103.1 See Section 137 for Precision and Bias statements. A round robin for Procedure C is being planned and the data will be available by the end of 2006.

TEST I_4 —DYNAMIC FATIGUE TEST FOR CARPET CUSHION

104. Scope

104.1 The purpose of this test is to determine: (*1*) retention of load bearing (65 % IFD), (*2*) a loss in thickness, and (*3*) structural breakdown as addressed by visual inspection.

104.2 This procedure describes tests that evaluate the specimen by repeatedly deflecting the carpet cushion by a 152 mm

[5] Detailed drawings are available from ASTM Headquarters. Request Adjunct ADJD3574.

Copyright by ASTM Int'l (all rights reserved);

免费标准网(www.freebz.net) 无需注册 即可下载

免费标准网(www.freebz.net) 标准最全面

diameter and 152 mm wide rubber covered roller exerting a force of 266 ± 5N on the test specimens.

104.3 This fatigue test may be conducted by either Procedure A or Procedure B. The test procedures differ only in the number of cycles used. Procedure A shall use 8000 cycles (approximately 5 h) and Procedure B shall use 40 000 cycles (approximately 12 h).

NOTE 26—No similar ISO standard exists.

105. Apparatus (Appendix X2)

105.1 The apparatus is identical to that described in Section 87 with the following changes. The roller described in 104.2 replaces the longer roller and is attached perpendicularly. The base platen is replaced or covered with a 19 mm thick plywood for mounting the sample. The sample is secured with floor tacks or staples. (See Fig. 4 for test apparatus.)

106. Test Specimens

106.1 The specimen is 380 mm long and 230 mm wide and 13 mm thick, unless otherwise agreed upon by supplier and purchaser.

107. Initial Measurements

107.1 Condition the specimens as in Section 6. The test should be run under the same conditions, if possible. Preflex the specimens two times 75 % of the nominal thickness. After a 6 ± 1 min rest, measure the original thickness, t_o, in accordance with Section 8 and determine the original 65 % IFD, F_o, in accordance with Sections 16-22 using a 102 mm diameter flat circular indentor foot.

108. Procedure

108.1 Secure the sample to the plywood base using staples or tape, making sure that the roller will not roll over the stapled areas. Set the counter for zero, start the machine, and fatigue the sample for 40 000 cycles.

109. Final Measurements

109.1 Within 60 ± 5 min after the fatigue test is completed measure the final thickness, t_f, in accordance with Section 8 and the final 65 % IFD, F_f, in accordance with 107.1 using the original thickness, t_o, to determine the 65 % IFD deflection.

109.2 For a measurement of more permanent fatigue repeat 109.1, except allow 24 ± 1h of recovery rather than 60 min.

110. Calculation and Inspection

110.1 Check the specimen for physical breakdown by visual examination.

110.2 Calculate and report the percentage loss in thickness as follows:

$$F_l = \frac{(t_o - t_f)}{(t_o)} \times 100 \quad (12)$$

where:
F_l = loss in thickness, %,
t_o = original specimen thickness, and
t_f = final specimen thickness.

110.3 Calculate the percentage IFD retention as follows:

$$R = 100 - \frac{(F_o - F_f \times 100)}{(F_o)} \quad (13)$$

where:
R = retain IFD, %,
L_o = original IFD force, and
L_f = final IFD force.

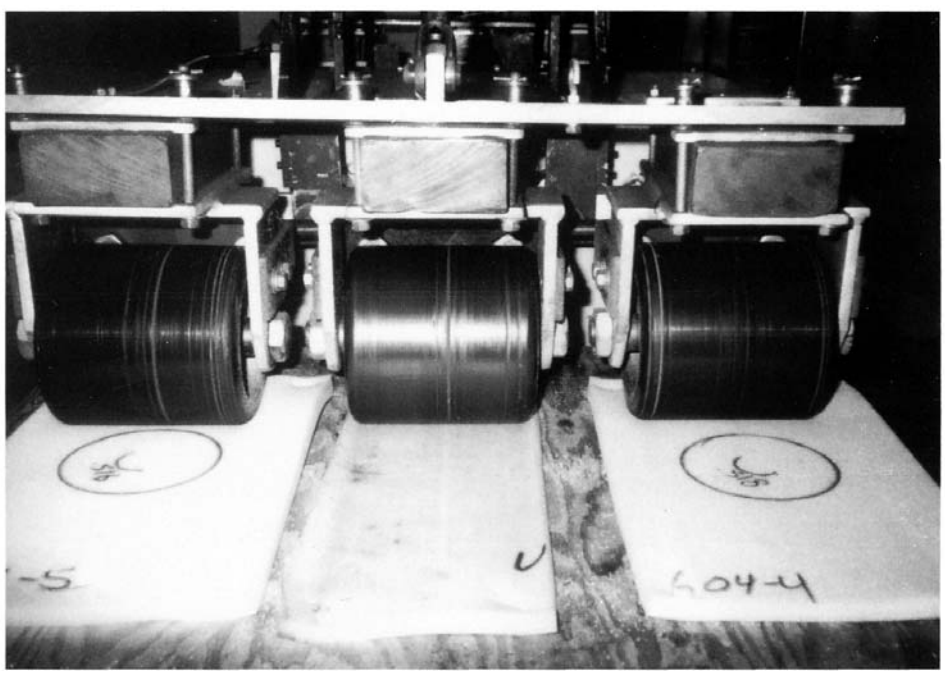

FIG. 4 Three-station Carpet Cushion Fatigue Tester

Copyright by ASTM Int'l (all rights reserved);

免费标准网(www.freebz.net) 无需注册 即可下载

免费标准网(www.freebz.net) 标准最全面

111. Report

111.1 Report the following information:

111.1.1 Percentage loss in thickness and percentage retention of 65 % indentation force deflection, and

111.1.2 Recovery time whether 60 min or 24 h.

112. Precision and Bias

112.1 Round robin testing to determine the precision of this method is being planned and the data will be available by the end of 2006.

TEST J—STEAM AUTOCLAVE AGING

113. Scope

113.1 This test consists of treating the foam specimen in a low-pressure steam autoclave and observing the effects on the properties of the foam specimen. Use either of the following procedures, J_1 or J_2 :

113.1.1 Procedure J_1, 3 h at 105 ± 3°C.

113.1.2 Procedure J_2, 5 h at 120 ± 5°C.

NOTE 27—ISO 2440 is a similar standard, but there are some technical differences.

114. Apparatus

114.1 *Steam Autoclave*, or similar vessel, that is thermostatically controlled to ±2°C and capable of withstanding gage pressures of up to 140 kPa.

115. Procedure

115.1 Fill the autoclave with fresh-distilled water to a level 50 mm above the bottom of the autoclave. Set the thermostat control at the desired procedures of test, which is between 105 ± 3°C or 120 ± 5°C. Allow the autoclave to heat until the water boils. Place the specimen on edge on a rack in the inside container so that one specimen does not touch another or any metal except at the supporting surface. Place the container inside the autoclave and close and tighten the top. Leave the safety valve open until all the air is out of the autoclave. This is apparent when steam begins blowing out of the ports on the safety valve. Close the valve 2 min after the appearance of steam, and take the zero time of the heat at this point.

115.2 After the exposed period, turn off the heat, release the steam pressure, and remove the specimens without delay. Dry the specimens for 3 h for each 25 mm of thickness at 100 ± 5°C in a mechanically convected dry-air oven. Allow them to come to temperature equilibrium, after removal from the oven, for at least 2 h at 23 ± 2°C and 50 ± 5 % relative humidity.

115.3 Test each specimen for the prescribed property in accordance with the appropriate test method.

NOTE 28—A drying temperature of 70°C may be used where 100°C adversely affects the final properties upon agreement by customer and supplier.

116. Calculation

116.1 Calculate the present change in physical property as follows:

$$\text{Physical property change, \%} = \frac{(P_o - P_f)}{(P_o)} \times 100 \qquad (14)$$

where:

P_o = mean property of the unexposed specimen, and

P_f = mean property of the exposed specimen.

117. Report

117.1 Report the following information:

117.1.1 Percent change in physical property,

117.1.2 Test procedure J_1 or J_2.

118. Precision and Bias

118.1 The precision of this method is dependent on the material property that is being measured.

TEST K—DRY HEAT AGING

119. Scope

119.1 This test consists of exposing foam specimens in an air-circulating oven and observing the effect on the properties of the foam.

NOTE 29—ISO 2440 is a similar standard, but there are some technical differences.

120. Apparatus

120.1 *Air-Circulating Oven*, capable of maintaining 140 ± 2°C for exposing the specimens. A device for sensing and recording the temperature of the oven at least every 2 h shall be attached.

121. Procedure

121.1 Expose the specimens for 22 h at 140 ± 2°C. Obtain and record the oven temperature near the specimen at least every 2 h.

121.2 Remove the specimens from the oven and condition for not less than 2 h at 23 ± 2°C and 50 ± 5 % relative humidity.

122. Calculation

122.1 Calculate the percent change in physical property as follows:

$$\text{Physical property change, \%} = \frac{((P_o - P_f))}{(P_o)} \times 100 \qquad (15)$$

where:

P_o = mean property of the unexposed specimen, and

P_f = mean property of the exposed specimen.

123. Report

123.1 Report the following information:

123.1.1 Percent change in physical property.

124. Precision and Bias

124.1 The precision of this method is dependent on the material property that is being measured.

TEST L—WET HEAT AGING

125. Scope

125.1 This test consists of exposing foam specimens in an environmental chamber and observing the effect on the properties of the foam.

Copyright by ASTM Int'l (all rights reserved);

免费标准网(www.freebz.net) 无需注册 即可下载

免费标准网(www.freebz.net) 标准最全面

NOTE 30—There is no similar or equivalent ISO standard.

126. Apparatus

126.1 *Environmental Chamber*, capable of maintaining 50 ± 2°C and 95 ± 5 % RH for exposing the specimens. A device for sensing and recording the temperature of the oven at least every 2 h shall be attached.

NOTE 31—Other temperature and humidity conditions may be used as agreed upon by the purchaser and the supplier.

127. Procedure

127.1 Place the specimens into the environmental chamber set to the temperature and humidity conditions specified in 126.1, making sure they do not touch each other. For tests such as compression set the specimens shall be clamped into the test fixture before putting them into the chamber. Expose the specimens for 22 h ± 5 min or as agreed upon by the supplier and purchaser.

127.2 After the exposure period remove the specimens from the oven and from any fixturing and then condition them for not less than 2 h at 23 ± 2°C and 50 ± 5 % relative humidity or as specified in the test method being evaluated.

127.3 Perform any measurements and calculations specified in the test method being evaluated.

128. Calculation

128.1 Calculate the percent change in physical property as follows:

$$\text{Physical property change, \%} = \frac{[(P_o - P_f)]}{(P_o)} \times 100 \qquad (16)$$

where

P_o = mean property of the unexposed specimen, and
P_f = mean property of the exposed specimen.

129. Report

129.1 Report the following information:

129.1.1 Percent change in physical property, and

129.1.2 Test method evaluated.

130. Precision and Bias

130.1 The precision of this method is dependent on the material property that is being measured.

TEST M—RECOVERY TIME

131. Scope

131.1 This method is used to determine the recovery time of slow recovery (viscoelastic) foams.

132. Apparatus

132.1 Use the standard IFD apparatus as described in 17.1.

133. Test Specimen

133.1 Use the standard IFD specimen as described in 18.1. One specimen shall be tested, unless otherwise agreed upon by supplier and purchaser.

134. Procedure

134.1 Place the test specimen on the perforated supporting plate. Bring the indenter foot into contact with the specimen with a 4.5 N preload to determine the specimen's initial thickness. Immediately indent the specimen 75 % of its initial thickness at a speed of 1000 ± 100 mm/min. After a 60-s dwell time, return the indenter to a 5 % deflection at 1000 ± 100 mm/min, starting a stopwatch immediately upon initiating the upward movement of the indenter. Stop the watch as soon as the foam recovers to a 4.5 N preload on the indenter.

135. Report

135.1 Report the recovery time in seconds.

136. Precision and Bias

136.1 A round robin is being planned to determine the precision of this test method and the data shall be available by the end of 2006. In a single lab repeatability study performed in 2005 with two materials, the recovery times varied by 8.2 % and 15.9 %, respectively.

137. Precision and Bias

137.1 Precision and bias for test methods in this standard are based on round robin studies conducted by the Polyurethane Foam Association from 1998 to 2000 in accordance with Practice E 691. The Test B_2 data was generated by the molded foam industry in 2004. For each study, three or four materials were carefully selected to cover the range of properties expected in commercially available products. The number of labs varied from 6 to 10. The samples were distributed by one lab, but individual specimens were prepared at the labs performing the tests. Each laboratory obtained six test results for each material. Precision, characterized by repeatability (S_r and r) and reproducibility (S_R and R) have been determined as shown in the individual tables.

137.2 *Bias*—There are no recognized standards by which to estimate bias for these test methods. (**Warning—**The explanation of r and R are only intended to present a meaningful way of considering the approximate precision of these test methods. The data in the tables should not be applied to acceptance or rejection of materials, as these data apply only to the materials tested in the round robins and are unlikely to be rigorously representative of other lots, formulations, conditions, materials, or laboratories. Users of these test methods should apply the principles outlined in Practice E 691 to generate data specific to their materials and laboratory.)

NOTE 32—The precision data presented in the tables were obtained using the test conditions defined in the test methods. If a material specification defines other test conditions, these precision data shall be assumed not to apply.

138. Keywords

138.1 bonded; flexible cellular; molded; slab; urethane

Copyright by ASTM Int'l (all rights reserved);

免费标准网(www.freebz.net) 无需注册 即可下载

免费标准网(www.freebz.net) 标准最全面

TABLE 1 Density Test A, kg/m³

(8 Laboratories)					
Material	Avg.	S_r[A]	S_R[B]	r[C]	R[D]
1	27.21	0.23	0.31	0.64	0.88
2	43.44	0.28	0.34	0.78	0.94
3	35.07	0.51	0.61	1.43	1.70

[A] S_r = within-laboratory standard deviation for the indicated material. It is obtained by pooling the within-laboratory standard deviations of the test results from all of the participating laboratories.
[B] S_R = between-laboratory reproducibility, expressed as standard deviation.
[C] r = within-laboratory critical interval between two results = 2.8 × S_r.
[D] R = between-laboratories critical interval between two results = 2.8 × S_R.

TABLE 2 IFD Test B_1, Thickness, mm

(8 Laboratories)					
Material	Avg.	S_r[A]	S_R[B]	r[C]	R[D]
1	104.1	0.20	0.31	0.53	1.50
2	102.3	0.28	0.34	0.53	1.52
3	99.1	0.45	0.61	0.74	2.08

[A] S_r = within-laboratory standard deviation for the indicated material. It is obtained by pooling the within-laboratory standard deviations of the test results from all of the participating laboratories.
[B] S_R = between-laboratory reproducibility, expressed as standard deviation.
[C] r = within-laboratory critical interval between two results = 2.8 × S_r.
[D] R = between-laboratories critical interval between two results = 2.8 × S_R.

TABLE 3 IFD Test B_1, 25 % IFD, N

(8 Laboratories)					
Material	Avg.	S_r[A]	S_R[B]	r[C]	R[D]
1	73.48	0.93	2.09	2.62	5.85
2	136.35	1.10	4.31	3.07	12.06
3	249.11	3.16	8.73	8.85	24.44

[A] S_r = within-laboratory standard deviation for the indicated material. It is obtained by pooling the within-laboratory standard deviations of the test results from all of the participating laboratories.
[B] S_R = between-laboratory reproducibility, expressed as standard deviation.
[C] r = within-laboratory critical interval between two results = 2.8 × S_r.
[D] R = between-laboratories critical interval between two results = 2.8 × S_R.

TABLE 4 IFD Test B_1, 65 % IFD, N

(8 Laboratories)					
Material	Avg.	S_r[A]	S_R[B]	r[C]	R[D]
1	147.91	2.99	5.68	8.37	15.92
2	253.33	2.34	8.49	6.56	23.77
3	491.16	7.18	20.64	20.16	57.81

[A] S_r = within-laboratory standard deviation for the indicated material. It is obtained by pooling the within-laboratory standard deviations of the test results from all of the participating laboratories.
[B] S_R = between-laboratory reproducibility, expressed as standard deviation.
[C] r = within-laboratory critical interval between two results = 2.8 × S_r.
[D] R = between-laboratories critical interval between two results = 2.8 × S_R.

TABLE 5 IFD Test B_1, 25 % RT IFD, N

(8 Laboratories)					
Material	Avg.	S_r[A]	S_R[B]	r[C]	R[D]
1	58.23	0.83	1.26	2.33	3.54
2	99.83	0.94	2.14	2.64	5.99
3	145.14	2.53	2.53	4.62	11.12

[A] S_r = within-laboratory standard deviation for the indicated material. It is obtained by pooling the within-laboratory standard deviations of the test results from all of the participating laboratories.
[B] S_R = between-laboratory reproducibility, expressed as standard deviation.
[C] r = within-laboratory critical interval between two results = 2.8 × S_r.
[D] R = between-laboratories critical interval between two results = 2.8 × S_R.

TABLE 6 IRGL Test B_2, 4.5 N Height, mm

(8 Laboratories)					
Material	Avg.	S_r[A]	S_R[B]	r[C]	R[D]
1	99.84	0.38	0.73	1.06	2.04
2	100.69	1.04	1.04	2.91	2.91
3	101.51	0.90	1.00	2.51	2.79
4	100.59	0.61	1.06	1.71	2.97

[A] S_r = within-laboratory standard deviation for the indicated material. It is obtained by pooling the within-laboratory standard deviations of the test results from all of the participating laboratories.
[B] S_R = between-laboratory reproducibility, expressed as standard deviation.
[C] r = within-laboratory critical interval between two results = 2.8 × S_r.
[D] R = between-laboratories critical interval between two results = 2.8 × S_R.

Copyright by ASTM Int'l (all rights reserved);

免费标准网(www.freebz.net) 无需注册 即可下载

免费标准网(www.freebz.net) 标准最全面

TABLE 7 IRGL Test B_2, 110 N Height, mm

(8 Laboratories)					
Material	Avg.	S_r[A]	S_R[B]	r[C]	R[D]
1	87.05	2.25	5.03	6.31	14.07
2	99.07	1.00	1.00	2.79	2.79
3	99.79	0.88	1.01	2.47	2.83
4	99.49	0.63	1.06	1.76	2.96

[A] S_r = within-laboratory standard deviation for the indicated material. It is obtained by pooling the within-laboratory standard deviations of the test results from all of the participating laboratories.
[B] S_R = between-laboratory reproducibility, expressed as standard deviation.
[C] r = within-laboratory critical interval between two results = 2.8 × S_r.
[D] R = between-laboratories critical interval between two results = 2.8 × S_R.

TABLE 8 IRGL Test B2, 220 N Height, mm

(8 Laboratories)					
Material	Avg.	S_r[A]	S_R[B]	r[C]	R[D]
1	41.06	2.82	5.20	7.88	14.55
2	93.76	0.98	3.54	2.74	9.92
3	98.37	0.92	1.26	2.57	3.53
4	98.66	0.58	1.06	1.62	2.98

[A] S_r = within-laboratory standard deviation for the indicated material. It is obtained by pooling the within-laboratory standard deviations of the test results from all of the participating laboratories.
[B] S_R = between-laboratory reproducibility, expressed as standard deviation.
[C] r = within-laboratory critical interval between two results = 2.8 × S_r.
[D] R = between-laboratories critical interval between two results = 2.8 × S_R.

TABLE 9 CFD Test C, 50 % CFD, kPa

(9 Laboratories)					
Material	Avg.	S_r[A]	S_R[B]	r[C]	R[D]
1	2.06	0.05	0.29	0.14	0.81
2	3.04	0.07	0.58	0.18	1.62
3	9.36	0.14	0.38	0.40	1.07

[A] S_r = within-laboratory standard deviation for the indicated material. It is obtained by pooling the within-laboratory standard deviations of the test results from all of the participating laboratories.
[B] S_R = between-laboratory reproducibility, expressed as standard deviation.
[C] r = within-laboratory critical interval between two results = 2.8 × S_r.
[D] R = between-laboratories critical interval between two results = 2.8 × S_R.

TABLE 10 Compression Set Test D, 90 % C_t, %

(9 Laboratories)					
Material	Avg.	S_r[A]	S_R[B]	r[C]	R[D]
1	3.36	0.62	0.83	1.73	2.34
2	5.78	0.82	0.97	2.30	2.71
3	8.23	0.83	1.61	2.34	4.51

[A] S_r = within-laboratory standard deviation for the indicated material. It is obtained by pooling the within-laboratory standard deviations of the test results from all of the participating laboratories.
[B] S_R = between-laboratory reproducibility, expressed as standard deviation.
[C] r = within-laboratory critical interval between two results = 2.8 × S_r.
[D] R = between-laboratories critical interval between two results = 2.8 × S_R.

TABLE 11 Compression Set Test D, 90 % C_d, %

(9 Laboratories)					
Material	Avg.	S_r[A]	S_R[B]	r[C]	R[D]
1	3.72	0.68	0.92	1.91	2.58
2	6.45	0.79	1.11	2.22	3.11
3	9.07	0.92	1.78	2.59	5.00

[A] S_r = within-laboratory standard deviation for the indicated material. It is obtained by pooling the within-laboratory standard deviations of the test results from all of the participating laboratories.
[B] S_R = between-laboratory reproducibility, expressed as standard deviation.
[C] r = within-laboratory critical interval between two results = 2.8 × S_r.
[D] R = between-laboratories critical interval between two results = 2.8 × S_R.

TABLE 12 Tensile Test E, D 3574 Die, kPa

(10 Laboratories)					
Material	Avg.	S_r[A]	S_R[B]	r[C]	R[D]
1	45.84	1.54	2.82	4.33	7.90
2	74.96	3.02	4.56	8.47	12.78
3	91.62	4.02	5.11	11.24	14.32

[A] S_r = within-laboratory standard deviation for the indicated material. It is obtained by pooling the within-laboratory standard deviations of the test results from all of the participating laboratories.
[B] S_R = between-laboratory reproducibility, expressed as standard deviation.
[C] r = within-laboratory critical interval between two results = 2.8 × S_r.
[D] R = between-laboratories critical interval between two results = 2.8 × S_R.

TABLE 13 Tensile Test E, D 412 Die, kPa

(10 Laboratories)					
Material	Avg.	S_r[A]	S_R[B]	r[C]	R[D]
1	46.06	2.67	4.00	7.48	11.19
2	78.20	3.88	4.81	10.85	13.47
3	89.99	3.26	3.42	9.12	9.56

[A] S_r = within-laboratory standard deviation for the indicated material. It is obtained by pooling the within-laboratory standard deviations of the test results from all of the participating laboratories.
[B] S_R = between-laboratory reproducibility, expressed as standard deviation.
[C] r = within-laboratory critical interval between two results = 2.8 × S_r.
[D] R = between-laboratories critical interval between two results = 2.8 × S_R.

TABLE 14 Tensile Test E, Elongation by Crosshead Travel, D 412 Die, %

(10 Laboratories)					
Material	Avg.	S_r[A]	S_R[B]	r[C]	R[D]
1	218.4	16.2	24.2	45.5	67.6
2	231.8	15.4	24.9	43.0	69.6
3	154.5	14.1	27.5	39.4	77.1

[A] S_r = within-laboratory standard deviation for the indicated material. It is obtained by pooling the within-laboratory standard deviations of the test results from all of the participating laboratories.
[B] S_R = between-laboratory reproducibility, expressed as standard deviation.
[C] r = within-laboratory critical interval between two results = 2.8 × S_r.
[D] R = between-laboratories critical interval between two results = 2.8 × S_R.

Copyright by ASTM Int'l (all rights reserved);

免费标准网(www.freebz.net) 无需注册 即可下载

免费标准网(www.freebz.net) 标准最全面

TABLE 15 Tensile Test E, Elongation by Crosshead Travel, D 3574 Die, %

(10 Laboratories)					
Material	Avg.	S_r[A]	S_R[B]	r[C]	R[D]
1	205.3	13.2	23.6	36.9	66.0
2	219.2	15.2	24.0	42.6	67.2
3	146.4	14.2	26.3	39.7	73.6

[A] S_r = within-laboratory standard deviation for the indicated material. It is obtained by pooling the within-laboratory standard deviations of the test results from all of the participating laboratories.
[B] S_R = between-laboratory reproducibility, expressed as standard deviation.
[C] r = within-laboratory critical interval between two results = 2.8 × S_r.
[D] R = between-laboratories critical interval between two results = 2.8 × S_R.

TABLE 16 Tensile Test E, Elongation by Benchmarking, D 3574 Die, %

(10 Laboratories)					
Material	Avg.	S_r[A]	S_R[B]	r[C]	R[D]
1	217.9	12.1	30.2	33.9	84.5
2	236.6	14.6	30.3	40.7	84.9
3	158.9	16.9	31.9	47.3	89.2

[A] S_r = within-laboratory standard deviation for the indicated material. It is obtained by pooling the within-laboratory standard deviations of the test results from all of the participating laboratories.
[B] S_R = between-laboratory reproducibility, expressed as standard deviation.
[C] r = within-laboratory critical interval between two results = 2.8 × S_r.
[D] R = between-laboratories critical interval between two results = 2.8 × S_R.

TABLE 17 Tear Test F, N/m

(6 Laboratories)					
Material	Avg.	S_r[A]	S_R[B]	r[C]	R[D]
1	599.4	41.6	52.1	116.5	145.8
2	244.0	18.0	35.3	50.4	98.9
3	215.2	17.6	28.3	49.2	79.1

[A] S_r = within-laboratory standard deviation for the indicated material. It is obtained by pooling the within-laboratory standard deviations of the test results from all of the participating laboratories.
[B] S_R = between-laboratory reproducibility, expressed as standard deviation.
[C] r = within-laboratory critical interval between two results = 2.8 × S_r.
[D] R = between-laboratories critical interval between two results = 2.8 × S_R.

TABLE 18 Air Flow Test G, m^3/min

(7 Laboratories)					
Material	Avg.	S_r[A]	S_R[B]	r[C]	R[D]
1	0.056	0.002	0.006	0.006	0.017
2	0.109	0.004	0.013	0.011	0.038
3	0.160	0.009	0.024	0.027	0.068

[A] S_r = within-laboratory standard deviation for the indicated material. It is obtained by pooling the within-laboratory standard deviations of the test results from all of the participating laboratories.
[B] S_R = between-laboratory reproducibility, expressed as standard deviation.
[C] r = within-laboratory critical interval between two results = 2.8 × S_r.
[D] R = between-laboratories critical interval between two results = 2.8 × S_R.

TABLE 19 Resilience Test H, %

(8 Laboratories)					
Material	Avg.	S_r[A]	S_R[B]	r[C]	R[D]
1	46.1	0.82	2.86	2.31	8.00
2	70.8	1.00	3.15	2.79	8.82
3	69.2	0.99	2.89	2.76	8.09

[A] S_r = within-laboratory standard deviation for the indicated material. It is obtained by pooling the within-laboratory standard deviations of the test results from all of the participating laboratories.
[B] S_R = between-laboratory reproducibility, expressed as standard deviation.
[C] r = within-laboratory critical interval between two results = 2.8 × S_r.
[D] R = between-laboratories critical interval between two results = 2.8 × S_R.

TABLE 20 Pounding Fatigue Test I_3 1 h Thickness Loss, %

(7 Laboratories)					
Material	Avg.	S_r[A]	S_R[B]	r[C]	R[D]
1	1.69	0.76	0.87	2.14	2.43
2	1.46	0.39	0.42	1.08	1.17
3	2.50	0.24	0.61	0.68	1.70

[A] S_r = within-laboratory standard deviation for the indicated material. It is obtained by pooling the within-laboratory standard deviations of the test results from all of the participating laboratories.
[B] S_R = between-laboratory reproducibility, expressed as standard deviation.
[C] r = within-laboratory critical interval between two results = 2.8 × S_r.
[D] R = between-laboratories critical interval between two results = 2.8 × S_R.

TABLE 21 Pounding Fatigue Test I_3 24 h Thickness Loss, %

(7 Laboratories)					
Material	Avg.	S_r[A]	S_R[B]	r[C]	R[D]
1	1.47	0.70	0.97	1.96	2.70
2	1.11	0.32	0.39	0.89	1.10
3	1.81	0.24	0.52	0.68	1.47

[A] S_r = within-laboratory standard deviation for the indicated material. It is obtained by pooling the within-laboratory standard deviations of the test results from all of the participating laboratories.
[B] S_R = between-laboratory reproducibility, expressed as standard deviation.
[C] r = within-laboratory critical interval between two results = 2.8 × S_r.
[D] R = between-laboratories critical interval between two results = 2.8 × S_R.

TABLE 22 Pounding Fatigue Test I_3 1 h 40 % IFD Loss, %

(7 Laboratories)					
Material	Avg.	S_r[A]	S_R[B]	r[C]	R[D]
1	29.9	1.34	2.93	3.75	8.22
2	20.6	2.11	2.49	5.92	6.96
3	34.1	1.56	2.86	4.36	8.01

[A] S_r = within-laboratory standard deviation for the indicated material. It is obtained by pooling the within-laboratory standard deviations of the test results from all of the participating laboratories.
[B] S_R = between-laboratory reproducibility, expressed as standard deviation.
[C] r = within-laboratory critical interval between two results = 2.8 × S_r.
[D] R = between-laboratories critical interval between two results = 2.8 × S_R.

Copyright by ASTM Int'l (all rights reserved);

免费标准网(www.freebz.net) 无需注册 即可下载

免费标准网(www.freebz.net) 标准最全面

TABLE 23 Pounding Fatigue Test I_3 24 h 40 % IFD Loss, %

(7 Laboratories)					
Material	Avg.	S_r[A]	S_R[B]	r[C]	R[D]
1	24.3	2.46	3.26	6.88	9.14
2	17.2	2.09	2.53	5.86	7.09
3	27.0	1.95	3.56	5.46	9.96

[A] S_r = within-laboratory standard deviation for the indicated material. It is obtained by pooling the within-laboratory standard deviations of the test results from all of the participating laboratories.
[B] S_R = between-laboratory reproducibility, expressed as standard deviation.
[C] r = within-laboratory critical interval between two results = 2.8 × S_r.
[D] R = between-laboratories critical interval between two results = 2.8 × S_R.

APPENDIXES

(Nonmandatory Information)

X1. SUGGESTED METHOD FOR SPECIFYING FLEXIBLE URETHANE FOAMS

X1.1 For simplification in specifying foams, a line call out system may be used. The line call out could be used on engineering drawings for parts. The properties correspond to the sections of this test method. The call out format shall be as follows:

ASTM D 3574 Type [Slab, Molded, Bonded or other, as specified]
Coring [Cored or Uncored]
Urethane Chemistry [Polyether, Polyester, HR, Conventional]
A Density [kg/m^3] maximum, minimum or range
B_1 IFD [N] [for 25 % and 65 % deflections, 100 mm thick sample] max, min, or range
B_2 IRGL [mm] [at 4.5, 110 and 220 N, 100 mm thick sample] max, min, or range
C CFD [kPa] [50 % deflection] max, min, or range
D Compression set [%] [method—C_d or C_t] max
E Tensile [kPa] min
F Tear [N/m] min
G Air Flow [cfm] min
H Ball Rebound [%] min
I_1 Static Fatigue [percent thickness loss and 25 % and 65 % IFD loss] max
I_2 Roller Shear [percent loss of thickness and IRGL values] max
I_3 Constant Force Pounding [percent change in thickness and percent change in 40 % IFD] max
I_4 Dynamic Fatigue Test for Carpet Cushion [percent loss of thickness and percent retention of 65 % IFD value] maximum value and minimum value, respectively
J_1 Steam Autoclave [physical properties to be tested as (tests A through I or M as specified, units as above] maximum or minimum values based on test specified
J_2 Steam Autoclave [physical properties to be tested as (tests A through I or M as specified, units as above] maximum or minimum values based on test specified
K Dry Heat Aging [physical properties to be tested as (tests A through I or M as specified, units as above] maximum or minimum values based on test specified
L Wet Heat Aging [physical properties to be tested as (tests A through I or M as specified, units as above] maximum or minimum values based on test specified
M Recovery Time [seconds] max, min, or range
X Other tests as specified (Individual tests listed with subscripts)

X1.2 Example:

D 3574 Type [Slab]
Coring [Uncored]
Urethane Chemistry [Polyether]
A Density [15.5 kg/m^3] min
B_1 IFD [13 mm thick specimen 80-140 N] range
C CFD [3.0-4.0 kPa at 50 % deflection] range
D Compression Set [10 % C_t] maximum
E Tensile [80 kPa] min
F Tear [0.25 kN/m] min
J_1 Steam Autoclave [15 % change in CFD] max
K Dry Heat Aging [15 % change in CFD] max
X_1 Flammability—MVSS 302 [102 mm/min] max
X_2 Odor—SAE J 1351 [3] max
X_3 Stain Resistance—ASTM D 925 Test A [no staining]
X_4 Low Temperature Flexibility—DCX MSAY 349 [no rupturing]
X_5 No auxiliary blowing agents may be used to manufacture product

Copyright by ASTM Int'l (all rights reserved);

免费标准网(www.freebz.net) 无需注册 即可下载

免费标准网(www.freebz.net) 标准最全面

X2. SUGGESTED METHOD OF CONSTRUCTION FOR A ROLLER SHEAR DYNAMIC FLEX FATIGUE APPARATUS

X2.1 The following requirements are established to define the equipment and relationship of parts for a constant-load roller shear machine. See Fig. X2.1 and Fig. X2.2 for reference to part numbers.

X2.2 *Roller*, 1:

X2.2.1 *Dimensions*—457-mm minimum length, and 76.20 ± 1.27-mm diameter.

X2.2.2 *Material*—Corrosion and wear-resistant metal, either (*1*) chrome-plated material, or (*2*) stainless steel.

X2.2.3 *Surface Finish*—Finish surface on roller is to be ground and equivalent to at least 0.001 mm.

X2.2.4 The mass of the roller shall not exceed 11.340 kg.

X2.3 *Roller Mounting Bracket Assembly* 2, 3, 4, 11—The assembly consists of metal members designed to attach the roller to a pivot point, to provide bearing surfaces for minimum friction for turning, and to serve as a platform to add required mass to the roller.

X2.3.1 *Bearings, 2 and 4*—The proper bearings are required on each end or roller axis (*A-A*) and also on the pivot axis (*B-B*). The bearing should be equivalent to the following example:

Bearing No. 4—Nice No. 1635, DC Ball Bearing 19 by 32 by 13 mm.

Bearing No. 2—Nice No. 6906, flange mounted radial bearing.

NOTE X2.1—Roller axis bearings may be mounted in the bracket with the axle attached to the roller or, if the roller is a hollow cylinder, the bearing may be press fit into the cylinder end with the bracket furnishing the axle.

X2.3.2 *Pivot Arm, 11*—The distance between the pivot axis and the roller axis shall be 203.20 ± 6.35 mm.

X2.3.3 *Roller Bracket Connector*, 3, connects the right and left bearing brackets across the top of the roller. The connection must also provide a flat horizontal surface with means (pin) to attach the weights. The weights must be centered directly above the axis of the roller.

X2.3.4 *Axis Relationship*—The roller axis (*A-A*) and pivot axis (*B-B*) must be parallel and lie in the same horizontal plane parallel to the specimen mounting base.

X2.3.5 *Alignment and Clearance*—Brackets and axles must be aligned so that no binding occurs to obstruct free turning on either axis. Brackets and other support members (5) must give free clearance so that specimen is not touched during test other than by roller surface.

X2.3.6 *Weight, 6*—The total vertical force exerted by the assembly plus the roller should not exceed 111 N as measured at a point directly above or below the roller axis when both roller and pivot axes are in the same horizontal plane (X2.3.4). Additional weights to be added as shown.

X2.3.7 *Vertical Adjustment, 7*—If the roller is not driven to provide stroke movement, provision should be made so that

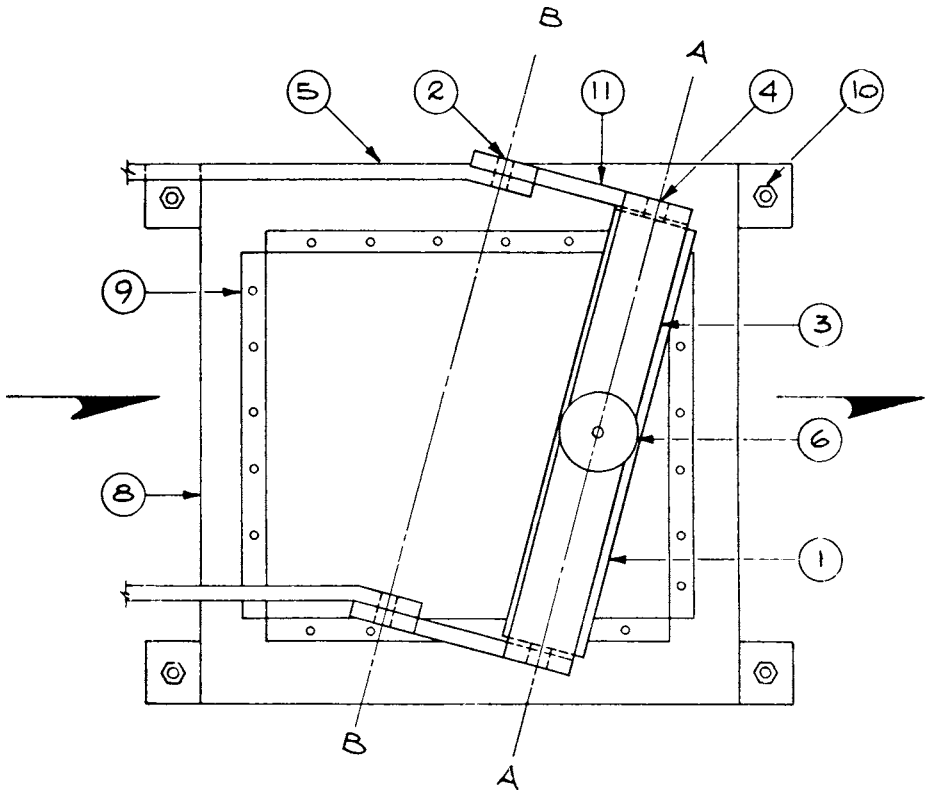

FIG. X2.1 Roller Shear Machine—Top View

Copyright by ASTM Int'l (all rights reserved);

免费标准网(www.freebz.net) 无需注册 即可下载

免费标准网(www.freebz.net) 标准最全面

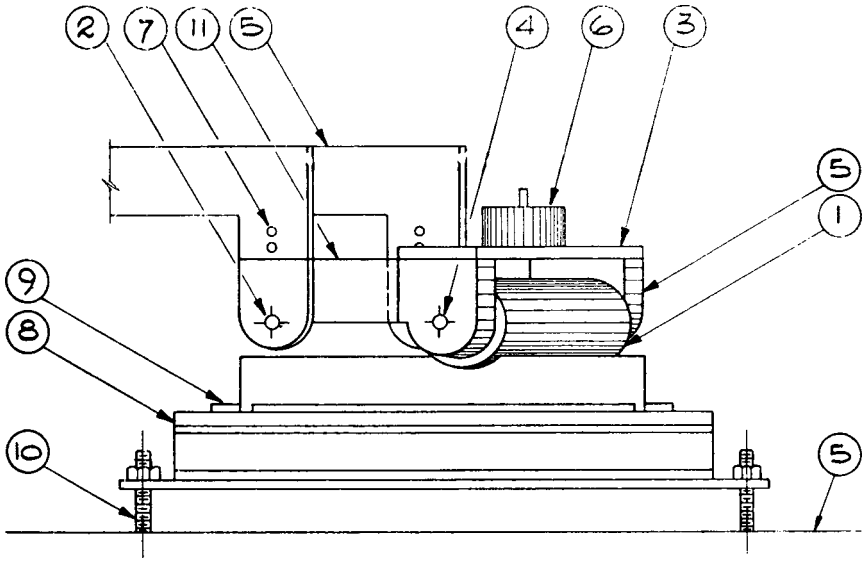

FIG. X2.2 Roller Shear Machine—Side View

attachment of the pivot axis to the support can be raised or lowered at least 75 mm [3 in.]. This adjustment must be able to be made in not less than 12.5-mm increments.

X2.4 *Specimen Mounting Base*, 8:

X2.4.1 *Dimensions*—500-mm minimum length. 500-mm minimum width, and 9.5-mm minimum thickness.

X2.4.2 *Material*—Structural-grade carbon steel.

X2.4.3 *Perforation*—6-mm diameter holes on 20-mm centers, over a minimum area covering 350 mm in length by 350 mm in width.

X2.4.4 *Surface Finish*—Top surface shall be a finish grind.

X2.4.5 *Hold-Down Plates, 9*—Provision to attach metal or wood hold-down plates for clamping cotton sheeting retaining strips to base. Four plates are required to cover perimeter of specimen size.

X2.4.6 *Vertical Adjustment and Level, 10*—If mounting base is not driven to provide stroke movement, provision should be made for vertical adjustment of at least 75 mm. This adjustment must be able to provide vertical movement in not less than 12.5-mm increments and maintain a horizontal level condition of the mounting base.

X2.5 *Mechanical Requirements*:

X2.5.1 *Stroke Length*—The length of stroke shall be 330 ± 12 mm.

X2.5.2 *Stroke Speed, Stroke Drive*—The rate of stroke speed should produce 0.47 ± 0.03 Hz. A cycle is a complete forward and reverse stroke. Either the roller or the mounting base may be driven to produce stroke travel. In either case, the drive mechanism must produce travel in a horizontal plane.

X2.5.3 *Angular Offset*—The axis of the roller should be level and mounted at a 15 ± 3° offset from perpendicular to the direction of the stroke.

X2.5.4 *Mounting Base Location*—The length of the mounting base should be parallel to the direction of the stroke and centered under the midpoint of the stroke and the center of the roller. The distance of the base surface from the roller axis (X2.3.4) should be 45 mm when vertical adjustment provides a minimum clearance.

X2.5.5 *Cycle Counter*—Means to record the number of cycles should be provided.

X3. DEFINITIONS OF TERMS USED TO DESCRIBE THE FORCE-DEFLECTION CURVE OF FLEXIBLE URETHANE FOAM

X3.1 *support factor*—the ratio of the 65 % indentation force deflection to the 25 % indentation force deflection determined after 1 min of rest. Most specifications are based on the 25 % IFD value of a 100-mm foam. The support factor thus indicates what 65 % IFD value would be acceptable for a particular application. The 65 % IFD measures the support region of the stress-strain curve. Seating foams with low support factors will usually bottom out and give inferior performance.

$$\text{Support factor (SF)} = (65\ \%\ \text{IFD}/25\ \%\ \text{IFD}) \qquad \text{(X3.1)}$$

Synonyms—Sag factor, hardness ratio, comfort factor. These terms should be removed from the vocabulary. Support factor is the term of choice.

X3.2 *guide factor*—the ratio of the 25 % indentation force deflection to the density after a 1-min rest. Most specifications do not have a density requirement; therefore the product with the highest guide factor has the cost advantage but not necessarily the performance advantage.

$$\text{Guide factor (GF)} = (25\ \%\ \text{IFD/density}) \qquad \text{(X3.2)}$$

Copyright by ASTM Int'l (all rights reserved);

免费标准网(www.freebz.net) 无需注册 即可下载

免费标准网(www.freebz.net) 标准最全面

X3.3 *initial hardness factor*—the ratio of the 25 % indentation force deflection force to the 5 % indentation force deflection determined without the 1-min rest. The initial hardness ratio defines the surface feel of a flexible urethane foam. Supple or soft surface foam will have a high value, while boardy or stiff surface foams will have a low value (Note X3.1).

$$\text{Initial hardness factor (IHF)} = (25\ \%\ \text{IFD}/5\ \%\ \text{IFD}) \qquad \text{(X3.3)}$$

Synonym— Comfort factor.

NOTE X3.1—Standard IFD curves can be used to generate the IHF, IM, and MIF data.

X3.4 *hardness index*—the term used in some specifications for the 50 % IFD value. The chair designer will often design furniture for a maximum 50 % indentation. Bar stools on the other hand may be designed for only a 20 % deflection.

X3.5 *indentation modulus*—the force required to produce an indentation of an additional 1 % between the limits of 20 % indentation force deflection and 40 % indentation force deflection determined without the 1-min rest. The slope of this line depends upon the resistance of the cells struts to post buckling (Note X3.1).

$$\text{Indentation modulus (IM)} = (40\ \%\ \text{IFD} - 20\ \%\ \text{IFD}/20\ \%\ \text{IFD}) \qquad \text{(X3.4)}$$

X3.6 *modulus irregularity factor*—the intercept produced on the stress axis by extrapolation of the linear portion of the stress-strain curve. The indentation modulus, that is, the slope of the line, may be substantially constant up to and beyond the 40 % indentation level. In this event, the indentation stress-strain curve is linear and passes through the origin Fig. X3.1. The indentation modulus usually varies at low levels of strain before reaching a constant value at above approximately 10 per strain. The stress-strain curve may exhibit a marked step in that region which may result in some discomfort in seating applications, Fig. X3.2 and Fig. X3.3. The MIF value is calculated from the same data necessary to derive the modulus of the foam as a seating material (Note X3.1).

$$\text{Modulus irregularity factor (MIF)} = 2 \times 20\ \%\ \text{IFD} - 40\ \%\ \text{IFD} \qquad \text{(X3.5)}$$

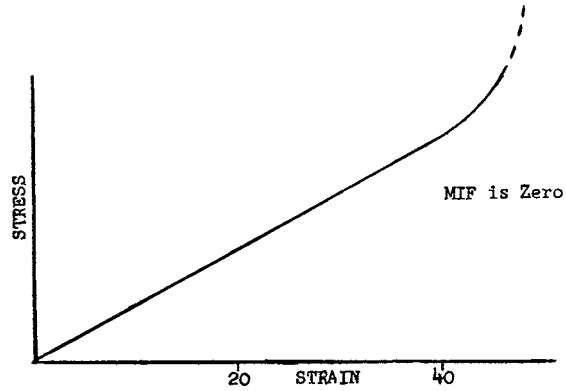

FIG. X3.1 Indentation Stress-Strain Curve (MIF is Zero)

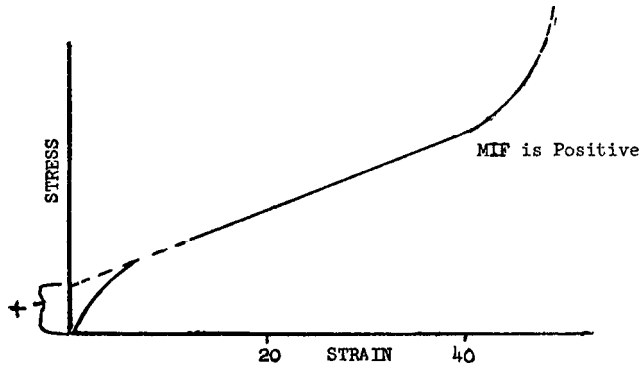

FIG. X3.2 Indentation Stress-Strain Curve (MIF is positive)

Copyright by ASTM Int'l (all rights reserved);

免费标准网(www.freebz.net) 无需注册 即可下载

免费标准网(www.freebz.net) 标准最全面

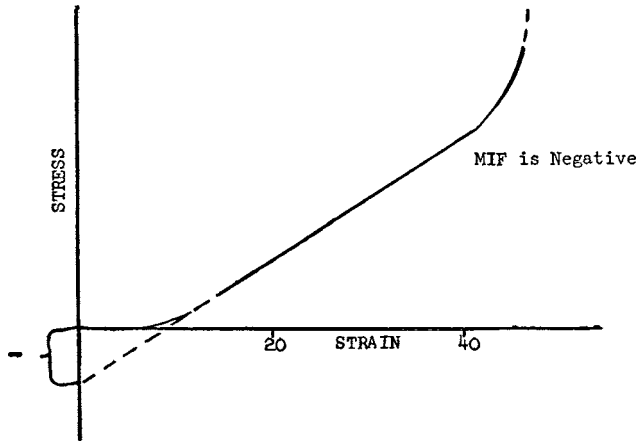

FIG. X3.3 Indentation Stress-Strain Curve (MIF is negative)

X4. SUGGESTED TESTS FOR DETERMINING COMBUSTIBILITY OF FLEXIBLE URETHANE FOAM

X4.1 This appendix lists for informational purposes only the test methods commonly used for determining the combustion properties of flexible urethane foams. These tests have been found useful in ascertaining the effectiveness of additives and reactants to modify the combustion characteristics of these materials. See 1.3.

X4.2 *Some Applicable Codes and Regulations for Specified Applications:*

Application	Regulation
Automotive	DOT MVSS 302
Mattress and cushion	DOC FF 4-72
Mattress and cushion	CAL TB 117
Mattress and cushion	CAL TB 133[A]
Mattress and cushion	CAL AB 603[A]
Mattress and cushion	NFPA 260[A]
Mattress and cushion	NFPA 261[A]
Mattress and cushion	BSI 5852[A]
Aviation	FAA Part 25.853 Par (b) App F
Aviation	FAA Oil Burner Test
Carpet cushion	ASTM E84
Carpet cushion	DOC FFI-70 (Pill Test)
Miscellaneous	ASTM D 3675

[A] Composite test. Foam, fabric, and other components may have a synergistic effect on each other.

Various governmental bodies have issued regulations based on Test Methods E 162 and E 662. The regulations are not the same for all bodies issuing them. Hence, the regulation of the government having jurisdiction should be consulted.

These standards are used to measure and describe the response of materials, products, or assemblies to heat and flame under controlled conditions, but do not by themselves incorporate all factors required for fire hazard or fire risk assessment of the materials, products, or assemblies under actual fire conditions.

X4.2.1 *Sources*:

Government Documents	Superintendent of Documents, US Government Printing Office, Washington, DC 20402
California	California Bureau of Home Furnishings, 3485 Orange Grove Ave., North Highlands, CA 95660
National Fire Protection Association	1 Batterymarch Park, P.O. Box 9101, Quincy, MA 02269
British Standard	British Standards Institute, 2 Park Street, London, England W1A 2B5

Copyright by ASTM Int'l (all rights reserved);

免费标准网(www.freebz.net) 无需注册 即可下载

免费标准网(www.freebz.net) 标准最全面

X5. SUGGESTED METHOD FOR THE VERIFICATION OF AN INCLINED OIL MANOMETER

X5.1 Adjust the feet to level the manometer. With a height gage resting on a level and flat surface measure the distance to the top of the glass tube at each major mark. Determine the area of the tube by direct measurement. The area of the reservoir is calculated by adding a measured amount of fluid with both ends of the manometer at atmospheric pressure. The calculation for the area of the reservoir (A):

$$A = (v - ay)/h \quad \text{(X5.1)}$$

where:
v = the volume added,
a = the area of the inside of the tube,
y = the distance between readings, and
h = the change in height.

X5.2 Change in pressure is calculated by:

$$Pm - Pn = wy\,(\sin\theta + a/A) \quad \text{(X5.2)}$$

where:
Pm = the low reading,
Pn = the high reading,
w = the specific gravity of the indicating fluid,
y = the distance between readings,
θ = the angle of the tube to normal,
a = the area of the inside of the tube, and
A = the area of the reservoir.

X5.3 The error is the difference between the calculated and the indicated value.

X6. SUGGESTED METHOD FOR MEASURING THE HYSTERESIS LOSS OF FOAMS

X6.1 Hysteresis Loss for the purpose of this method is defined as the difference between the loading energy and the unloading energy expressed as a percentage of the loading energy.

$$\textit{Hysteresis Loss} = [\textit{Loading Energy} - \textit{Unloading Energy}] \times 100/[\textit{Loading Energy}]$$

where:

1) Energy is defined as the area under the Force/Deflection Curve.

2) Loading Energy is the energy required to indent or compress a flexible material to a preset deflection (compression cycle).

3) Unloading Energy is the Energy recovered when the indentation or compression platen is retacted from the preset deflection and completely unloaded. (decompression cycle).

Procedure A—IFD Hysteresis Loss

X6.2 Prepare and preflex samples in accordance with ASTM D 3574 Test B_1. After the 6 ± 1 minute waiting period, indent the sample at a rate of 50 ± 5 mm/min by 75 ± 5 % of its original height. Immediately remove the indentation force at 50 ± 5 mm/min until the platen fully returns. Calculate the hysteresis loss as defined above.

Procedure B—CFD Hysteresis Loss

X6.3 Prepare and preflex samples in accordance with ASTM D 3574 Test C. After the 6 ± 1 minute waiting period, compress the sample at a rate of 50 ± 5 mm/min by 75 ± 5 % of its original height. Immediately remove the compression force at 50 ± 5 mm/min until the platen fully returns. Calculate the hysteresis loss as defined above.

NOTE X6.1—Different wait times, test speeds, and deflections may be agreed upon by customer and supplier.

NOTE X6.2—It is extremely important that the Universal Testing Machine's (UTM) crosshead reverses direction with minimal hesitation at the maximum compression point, otherwise false readings will be obtained.

NOTE X6.3—In addition to the hysteresis loss number, identify the foam as core or with skin, indicate which procedure was followed and any variances to the procedure, such as those listed in Note X6.1 above.

Copyright by ASTM Int'l (all rights reserved);

免费标准网(www.freebz.net) 无需注册 即可下载

免费标准网(www.freebz.net) 标准最全面

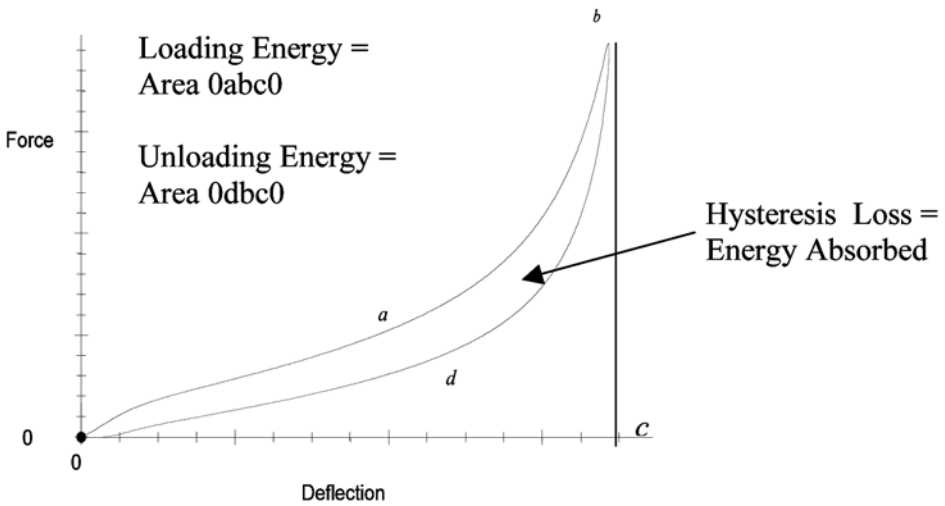

FIG. X6.1 Hysteresis Loss

SUMMARY OF CHANGES

Committee D20 has identified the location of selected changes to this standard since the last issue, D 3574 - 03, that may impact the use of this standard. (July 1, 2005)

(*1*) Added Precision and Bias, as well as changed the name for Test B_2: Indentation Residual Gage Load.
(*2*) Added a standard recovery test for slow recovery foams.
(*3*) Added a standard hysteresis loss method for urethane foams.
(*4*) Added a line call out system for flexible urethane foams.
(*5*) Defined viscoelastic foams and test method modifications associated with their unique properties.

ASTM International takes no position respecting the validity of any patent rights asserted in connection with any item mentioned in this standard. Users of this standard are expressly advised that determination of the validity of any such patent rights, and the risk of infringement of such rights, are entirely their own responsibility.

This standard is subject to revision at any time by the responsible technical committee and must be reviewed every five years and if not revised, either reapproved or withdrawn. Your comments are invited either for revision of this standard or for additional standards and should be addressed to ASTM International Headquarters. Your comments will receive careful consideration at a meeting of the responsible technical committee, which you may attend. If you feel that your comments have not received a fair hearing you should make your views known to the ASTM Committee on Standards, at the address shown below.

This standard is copyrighted by ASTM International, 100 Barr Harbor Drive, PO Box C700, West Conshohocken, PA 19428-2959, United States. Individual reprints (single or multiple copies) of this standard may be obtained by contacting ASTM at the above address or at 610-832-9585 (phone), 610-832-9555 (fax), or service@astm.org (e-mail); or through the ASTM website (www.astm.org).

Copyright by ASTM Int'l (all rights reserved);

免费标准网(www.freebz.net) 无需注册 即可下载